For Personal Use ONLY

Instruction Book

INTERNATIONAL

Models D-2 and D-15

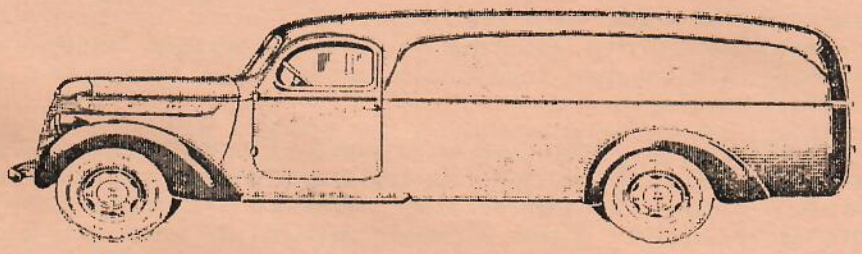

including illustrations and parts list

Important

TO INTERNATIONAL TRUCK OWNERS—

This instruction manual has been prepared and is furnished for the purpose of giving the user as much information as possible pertaining to the care and operation of truck. The owner is urged to read and study this book and, if ordinary care is exercised, he will be assured of satisfactory service.

INTERNATIONAL HARVESTER COMPANY
(INCORPORATED)
180 NORTH MICHIGAN AVE. CHICAGO, ILLINOIS, U.S.A.

INT. 3462. 5-8-39.

PRESERVE THIS INSTRUCTION BOOK

(Dom. & Exp.)

John & Susan Hansen

For Personal Use ONLY

☞ See Lubrication Chart on page 18

Special Instructions

Read carefully before attempting to operate truck.

1. The most important thing in operating a truck is proper attention to lubrication. Inspect engine oil daily. Use lubricant recommended on Chart. It is poor economy to use dirty oil or oil of inferior quality.
2. A new truck should not be driven faster than 30 miles an hour for the first 500 miles. The engine should not be raced or worked hard under any circumstances, until it has warmed up and is running smoothly, and with the carburetor choke button pushed "In."
3. Remove and clean "Air Cleaner" after every 5,000 miles, of oftener under severe dust conditions.
4. When starting, always engage clutch slowly so that engine will pick up the load gradually. This is particularly necessary when truck is under a heavy load.
5. When ordering parts for replacement, be sure to mention chassis serial number and model of truck, also give engine number.
6. No warranty is made with respect to tires, rims, ignition apparatus, horns, or other signalling devices, starting devices, generators, batteries, speedometers, or other trade accessories, inasmuch as they are warranted separately by the respective manufacturers.
7. All "International" Branches and Service Stations are uniformly equipped to service International Trucks. Every truck owner will receive courteous attention and prompt, efficient service, whether a minor repair or a major overhauling is required. Each Branch carries an adequate stock of "Genuine" replacement parts for all emergencies and well-trained mechanics work according to factory standards.
8. We reserve the right to make changes in design or add any improvements without incurring the obligation to install such changes on motor trucks previously purchased.

If You Are a Good Driver You Do These Things

Never try to steer with one or both hands on the hub or spokes of the wheel.

Never drive with an elbow out of the window.

Always look both ways at every intersection.

Stop conversation entirely whenever any maneuvering has to be done.

Never change from one lane to another at an intersection, on a curve, or at the top of a hill.

A good driver is courteous and believes in fair play at all times. Learn to be a good driver. The rules are simple, and you will live longer.

Specifications will be found on inside back cover.

John & Susan Hansen

For Personal Use ONLY

CAUTION: Based on the fire hazard and insurance regulations, we do not recommend the use of gasoline for the cleaning of parts, at least not when service is performed inside of buildings. A less inflammable fluid than gasoline should be used, such as Stoddard solvent or kerosene.

NOTICE: Inspect fenders, hood, windshield, etc., so that blemishes or injuries received in transit may be noted on the freight bill.

To Prepare Truck for Service

RADIATOR (Filler Cap is under Hood)

Fill radiator with clean soft water until water comes out of overflow pipe. If clean soft water cannot be obtained, strain through muslin or similar material to prevent foreign matter from entering. Never use water containing lime or other mineral matter. Under no circumstances should cold water be poured into radiator when engine is hot.

During cold weather cover the lower portion of the radiator sufficiently to maintain 160° to 180° F. For continuous cold weather use solutions having a low freezing point.

FUEL TANK

Never fill tank while engine is running or when an open flame is near. Keep funnel in contact with metal of tank when pouring in fuel to avoid possibility of an electric spark igniting the gas. Be very careful about lighting matches near gasoline, as the air within a radius of several feet is permeated with a highly explosive vapor. See that vent hole in fuel tank cap does not become plugged, as this will prevent proper flow of fuel to carburetor.

ENGINE OIL

Be sure that lubricating oil in crankcase is up to the "Full" mark on bayonet type gauge. Use only a good grade of engine oil. Refer to the Lubrication Chart. When testing oil level, the bayonet type gauge should be withdrawn and wiped clean; then inserted all the way and withdrawn for a true reading. Never test oil level while engine is running.

BATTERY

Be sure water level is 1/2" above separators and plates. Use pure distilled water only. Connect up loose terminal.

TIRES

Examine tires and be sure they have the proper air pressure. See tire pressure data on inside back cover.

HYDRAULIC BRAKE MASTER CYLINDERR

Be sure fluid level is within 3/8" from bottom of filler neck.
Always use Genuine "Lockheed" Fluid.

John & Susan Hansen

For Personal Use ONLY

Operating Instructions

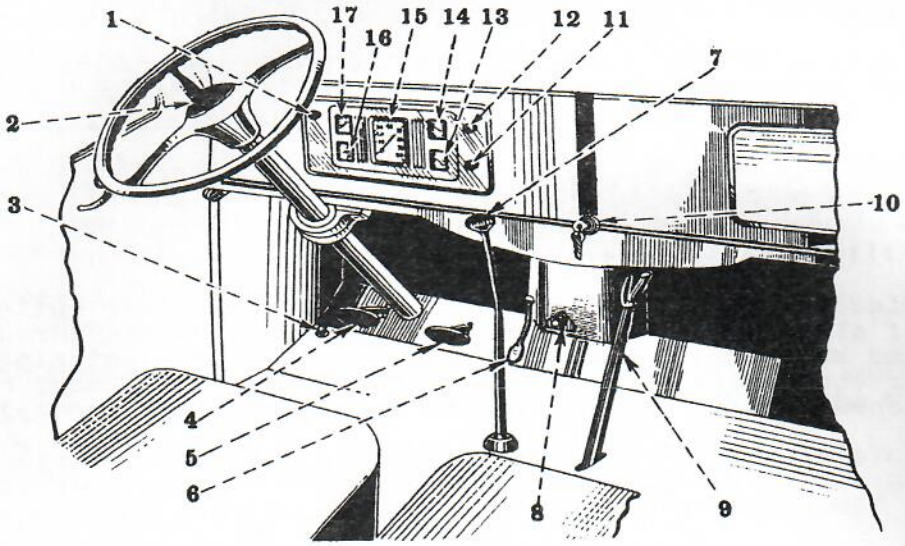

Ref. No.	Description	Ref. No.	Description
1	Head, tail lamp and panel switch.	9	Hand brake lever.
2	Horn button.	10	Ignition switch.
3	Dimmer switch.	11	Throttle control.
4	Clutch pedal.	12	Choke control.
5	Brake pedal.	13	Fuel gauge.
6	Accelerator.	14	Oil pressure gauge.
7	Transmission control lever.	15	Speedometer.
8	Starting switch.	16	Ammeter.
		17	Water temperature gauge.

LIGHTING CONTROL SWITCHES

The head lamps, tail lamp and instrument panel lamp are controlled by a single switch which is operated by a button on the instrument panel. When the button is pulled half-way out the tail lamp and instrument panel lamp only are lighted. When button is pulled out all of the way the head lamps, tail lamp and instrument panel lamp are lighted. In addition to this switch control, the beams from the head lamps can be switched from dim to bright or from bright to dim by pressing on the foot dimmer switch located on the toe board.

OIL PRESSURE

Pressure on gauge at idling speed (200 to 300 R.P.M.) should read between 5 to 10 pounds, when oil is hot. Maximum pressure is set at the factory to read between 25 to 30 pounds (at 500 to 600 R.P.M.). Oil pressure is controlled by a relief valve located on the distributor side of crankcase, and is not adjustable.

John & Susan Hansen

For Personal Use ONLY

OPERATING INSTRUCTIONS

TO START ENGINE

1. Set hand brake lever (pull back).
2. Put gear control lever in neutral position.
3. Pull throttle button 1/3 open. With button 1/3 open the engine will run at excessive speed and throttle button must be gradually pushed in until the proper idling speed is obtained. Do not use throttle except for starting or idling.
4. Insert switch key and turn it to running position.
5. Pull choke button 1/2 open. Do not use choke when engine is warm. In extremely cold temperature the choke button may be pulled out full distance, but should be immediately pushed part way in when engine starts. *Caution:* If choke is not properly used, engine can be seriously injured by allowing unburned gasoline to leak down past the pistons, thus thinning the lubricating oil to a degree where its value as a protecting film between moving parts is entirely destroyed. Because of this, it is recommended that new oil be used more often in extremely cold weather.
6. Push clutch pedal forward and keep it there until the engine is running.
7. Step on starting switch (remove foot from switch the instant engine starts). When engine warms up, gradually push in choke button.

TO START TRUCK

Push clutch pedal forward, disengaging clutch. Clutch must always be disengaged when changing gears.

First, or low, speed: Move gear control lever towards left and pull back into position marked (1). Speed up engine slightly and engage clutch slowly, so as to neither stall the engine nor jerk the truck, and at the same time release the hand brake.

To shift to second speed: As the truck gains speed, declutch, push gear control lever forward, right, and then forward to position marked (2). Engage clutch slowly.

To shift to third speed: Declutch and pull lever back to position marked (3). Engage clutch slowly.

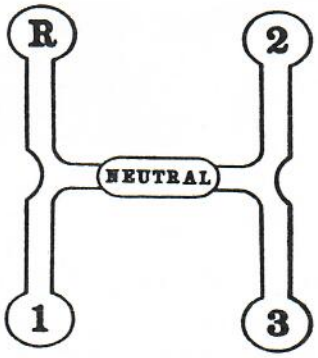

1 - First or low speed.
2 - Second or intermediate
3 - Third or high speed.
R - Reverse.

TO REVERSE

Declutch, stop truck and push gear control lever forward to position marked (R). Engage clutch slowly.

TO STOP TRUCK

Close throttle and apply foot brake. When truck has slowed down to idle speed of engine, declutch, continuing to apply brakes until truck stops. Put gear control lever in neutral position and apply hand brake when truck has stopped. Clutch may then be engaged.

TO STOP ENGINE

Close throttle and put switch in "off" position.

John & Susan Hansen

For Personal Use ONLY

CARBURETOR (Zenith)

Dirt and water will disturb the functioning of the carburetor. Clean periodically.

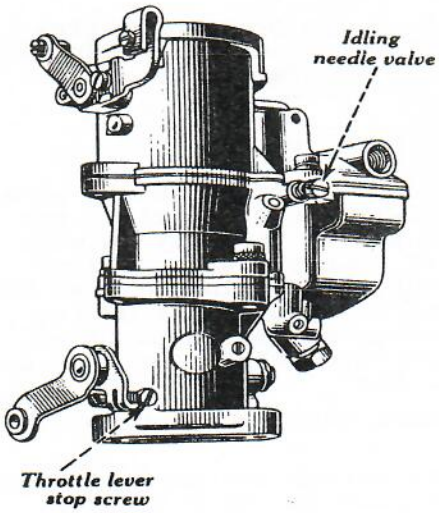

Idling Adjustment:

Clean and gap spark plugs *(See page 11)*. Clean and adjust distributor breaker points *(See page 10)*. Start engine and run until thoroughly warm.

Close throttle fully and set the stop screw on the throttle lever so that the engine will run sufficiently fast to keep it from stalling. Turn in or out on idling needle valve until engine fires evenly and without galloping or skipping. Then back off on stop screw until desired idling speed is obtained, after which it may be necessary to readjust the idling needle valve.

Float Level Adjustment:

The float level is properly set at the factory and should require no adjustment except when rough handling of carburetor has changed the level.

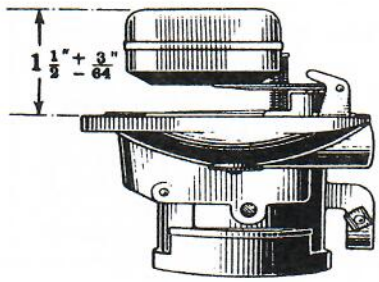

For good performance, a float level of 1-1/2" (with an allowable variation of 3/64") should be maintained. This measurement should be taken on side of float opposite the intake needle and measured from bottom of float to machined surface of bowl cover, with gasket removed.

Do not bend the float lever arm to change float level. A replacement of the float is recommended whenever maladjustment of float level exists.

AIR CLEANER (Oil Bath Type)

Remove filter element and wash in kerosene every 5,000 miles, or oftener under severe dust conditions. Clean out oil base and refill to indicated level with clean oil (1 pint, U.S.). For warm climate use SAE 50 and for cold climate use SAE 20 or SAE 30.

Be sure all kerosene has thoroughly drained from filter element before reassembling.

☞ *Always consult an International Harvester Company Service Station before attempting a general overhauling or when any mechanical difficulties occur.*

John & Susan Hansen

For Personal Use ONLY

FUEL PUMP

In some instances trouble is attributed to the fuel pump, when in reality it is caused by some other condition. Trouble should be carefully checked to avoid the needless replacement of the fuel pump.

Lack of Fuel at the Carburetor:-

Main fuel tank empty. Leaky fuel pipe or connections. Fuel filter bowl loose, cork gasket broken or dirty filtering element. Loose valve plug or leakage of fuel at the diaphragm.

Remove fuel line at carburetor and run starting motor. If fuel spurts out of the fuel line, the fuel pump is working.

Leakage of Fuel at the Diaphragm:-

Loosen cover screws; then tighten them alternately and securely. Caution: Do not dismantle the pump body. Note: Sometimes there appears to be a leak at the diaphragm, whereas the leak actually exists at one of the pipe fittings and fuel has run down the pump to the diaphragm flange, appearing to originate there.

If trouble cannot be located after a careful check, take fuel pump to an Internation Harvester Company Service Station.

FUEL FILTER

The filter bowl and filtering element should be removed and cleaned periodically.

To Clean: Loosen thumb screw on bottom of filter and remove filter bowl and filtering element. Wash filter bowl in kerosene. The sediment can be removed from the filtering element with a blast of air after serrated nut on post has been unscrewed a few turns.

When assembling be sure that serrated nut on filter post is finger tight, cork gasket is in place and thumb screw is tight. A leak at the cork gasket will cause erratic action of the pump and retard delivery of fuel to the carburetor.

When a new cork gasket is used, soak it in light engine oil before assembling.

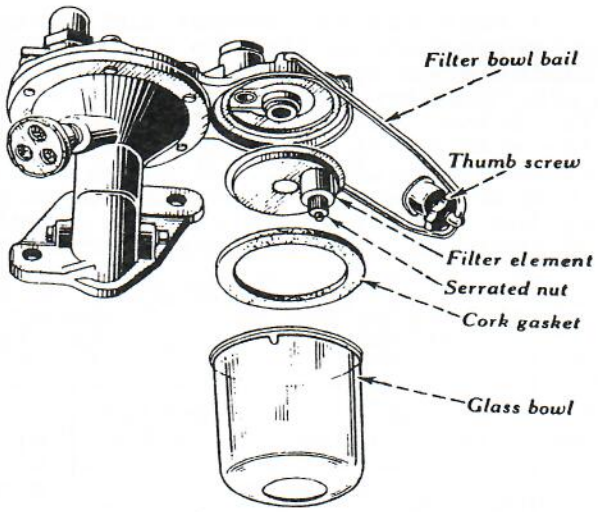

John & Susan Hansen

For Personal Use ONLY

WATER PUMP PACKING NUT ADJUSTMENT

A water leak at the pump shaft is usually caused from neglecting to turn down the grease cup regularly. If the leak is not stopped by turning down the grease cup, the packing nut should be tightened. Packing nut should not be tightened to a point that will cause binding of the pump shaft. When packing nut has reached the limit of its travel, new packing should be installed.

FAN BELT ADJUSTMENT

Tension of belt should be examined periodically. The proper tension is obtained when belt can be depressed approximately 1/2" on center of section between fan pulley and generator.

To adjust the belt, loosen generator mounting capscrews and generator brace capscrew, then move generator in or out as required. After adjustment has been made, be sure to tighten the capscrews.

When belt becomes grease-soaked or worn to a great extent, it should be replaced to prevent slipping.

RADIATOR

Drain the radiator every 1000 miles and flush with fresh water to remove rust and other foreign deposits. In order to completely drain the water from the cooling system, it is necessary to open the drain cock on the left hand side of cylinder block, between the generator and the distributor. Chemical mixtures should not be used in attempting to stop radiator leaks. During cold weather cover the lower portion of the radiator sufficiently high to maintain 160° to 180° F.

ANTI-FREEZING SOLUTIONS

For continuous cold weather use solutions having a low freezing point.

Do not use calcium chloride or salt solutions, as they cause water jacket to rust and thus clog up water circulation.

If a solution of alcohol and water is used, keep adding a small amount of alcohol from time to time to compensate for rapid evaporation. Glycerine does not evaporate and need not be renewed.

To Clean: After anti-freezing solutions have been removed, fill radiator with a hot solution of lye water the strength of one pound of lye to seven gallons (U.S.) of water. Run engine for about ten minutes, then drain solution and thoroughly flush system. When flushing the system, radiator outlet hose should be disconnected as large particles of sediment will not pass through the drain cock.

PROPERTIES OF ANTI-FREEZING SOLUTIONS

% By Volume	Denatured Alcohol			Menthanol (Wood Alcohol)			Distilled Glycerine			Ethylene Glycol (Prestone)		
	Freezing Point		Specific Gravity	Freezing Point		Specific Gravity	Freezing Point		Specific Gravity	Freezing Point		Specific Gravity
	°C	°F		°C	°F		°C	°F		°C	°F	
0%	0	32	1.000	0	32	1.000	0	32	1.000	0	32	1.000
10%	-3	27	.988	-5	23	.987	-2	29	1.029	-3	26	1.016
20%	-7	19	.978	-12	10	.975	-6	21	1.057	-9	16	1.031
30%	-12	10	.968	-19	-2	.963	-11	12	1.085	-16	3	1.045
40%	-19	-2	.957	-29	-20	.952	-18	0	1.112	-24	-11	1.058
50%	-28	-18	.943	-40	-40	.937	-26	-15	1.140	-35	-31	1.070

John & Susan Hansen

For Personal Use ONLY

CLUTCH PEDAL ADJUSTMENT

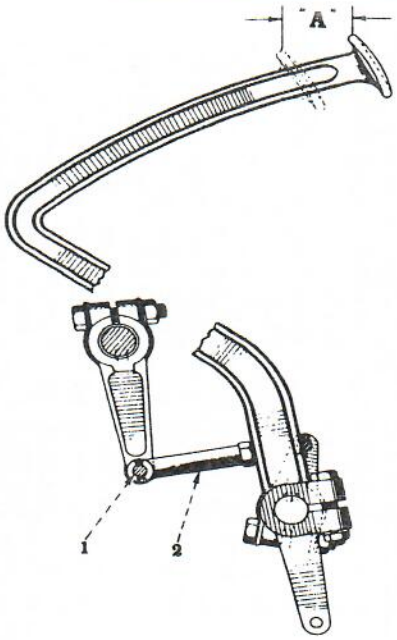

☞ *Keep foot off the clutch pedal except to shift gears or when truck is brought to a stop.*

The correct clearance, or free travel, of the clutch pedal is from 1-1/4" to 1-3/4" *(see "A" on illustration)* that is - when clutch pedal is depressed, there should be from 1-1/4" to 1-3/4" movement in the pedal before clutch starts to disengage.

The pedal should be checked occasionally and adjusted whenever free travel has been reduced to 1" or less.

To adjust the clutch pedal, remove clevis pin (1) and turn adjustable yoke (2).

PROPELLER SHAFT AND UNIVERSAL JOINT

Disassembly can be made at either the front or the rear section of the joint by merely removing the four screws holding the yoke and trunnion bearings.
It is extremely important that the individual trunnion bearings be reassembled on the same journals from which they were originally removed, and it is advisable to wire them in place while other service operations are being performed.
Caution: In reassembling complete assemblies, be sure that the splined stub is entered in the slip yoke so as to bring the trunnions of the yoke on rear end of shaft parallel with the trunnions of the slip yoke on the front joint. If this is not done a rough and unsatisfactory performing joint will result.

CHASSIS SPRINGS

Spring breakage can be materially reduced by proper loading, keeping spring "U" bolts and clips tight and lubricating spring leaves and shackle pins freely. Examine the spring "U" bolts and rebound clips. Tighten the nuts periodically.

FRONT WHEEL BEARING ADJUSTMENT

Jack up wheels. Remove hub cap and front wheel grease cap. Pull cotter pin and tighten wheel bearing adjusting nut until wheel binds slightly, rotating wheel at the same time to make sure that all surfaces are in proper contact. Back nut off one castellation from the cotter pin hole, which assures sufficient looseness. Replace cotter pin and fasten securely.

REAR WHEEL BEARING ADJUSTMENT (D-15 Truck Only)

Jack up wheels. Remove hub cap and axle shaft. Free wheel bearing nut from lock and remove. Tighten inner nut until wheel binds slightly, rotating wheel at the same time to make sure that all surfaces are in proper contact. Back off inner-nut about one sixth turn and insert steel stamping lock into keyway on tube so the turned-over part falls into place on inner nut. Replace outer nut, tighten and lock securely in place, using another section of the steel stamping lock than was first used.

☞ *Be sure brakes are not dragging, before making bearing adjustments.*

John & Susan Hansen

WIRING DIAGRAM (Left Hand Drive Trucks)

Ref. No.	I H C Part No. Cables
1	69028 H
2	22803 VX
3	10792 VDX
4	63538 HY
5	63538 HY
6	63545 HY
7	22803 VX
8	22821 VAY
9	81982 HY
10	63533 H
11	63530 HA
12	64025 HY
13	63536 H
14	63542 HY
15	66568 HY
16	69646 HZ
17	69102 HY
18	63685 HX
19	63684 HY
20	63686 HX
22	63537 HY
23	63530 HA
24	63526 HY
25	63540 HY
26	63539 HY
27	63549 HY
28	63548 HY
29	63523 HY
30	27594 HX
31	63573 HY
32	22830 VX
33	22830 VX
34	10792 VDX
35	63571 HY
36	66992 HY

Ref. Letter	I H C Part No.
A	26375 H - terminal (positive).
	26376 H - terminal (negative).
B	27594 HX-high tension cable.
C	63571 HY- low tension cable.
D	10815 VA- fuse (20 amp.,6 volt).
E	46628 HA- spark plug (AC-D-7).
	37762 H - gasket.
F	▲46970 H - horn (K-16-2002).
G	63089 H - temperature (engine unit).
H	63090 H - Oil pressure (engine unit).
I	▲13555 D - Ignition coil (528-C).
J	▲64931 H - Starting switch (405-C).
K	63400 H - Junction block.
L	▲50212 HA- ignition switch (199712).
M	64573 H - fuel tank gauge.

Ref. Letter	I H C Part No.
N	65212 HA- instrument panel *(see page 34)*.
O	.....- battery.
P	.....- stop and tail lamps *(see page 36)*.
R	68024 HA- horn button.
S	▲36614 HA- lighting switch (481-W).
T	▲84142 H - dimmer switch (1997003).
U	63400 H - junction block.
V	48164 H - stop lamp switch.
W	..... - head lamps *(see page 35)*.
X	▲60611 H - generator (946P) (D-2 trucks).
	▲60610 HX- generator (946N) (D-15 trucks).
Y	▲41612 HA- distributor (622-R).
Z	▲60827 H - starting motor (739-H).
...	▲43527 HA- distributor vacuum control(681-E).
...	66337 H - instrument panel lamp bulb.

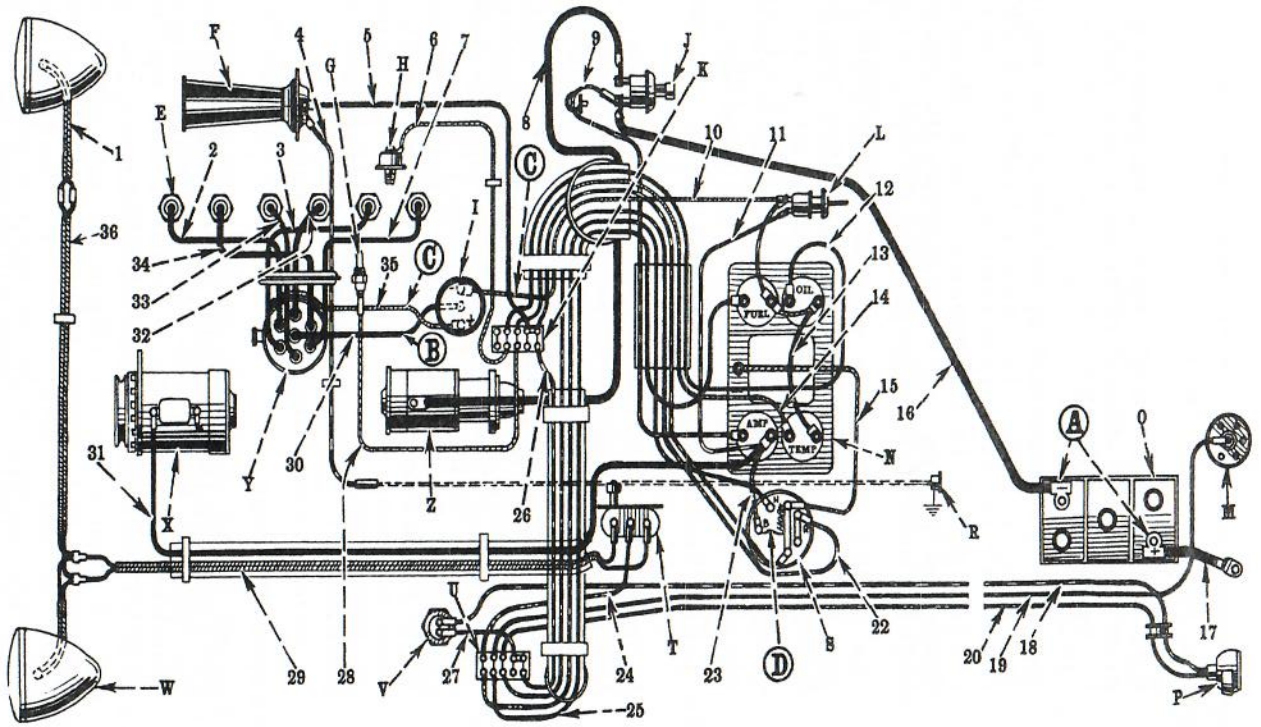

When ordering, always use IHC Part Nos.

▲- Delco-Remy Units

John & Susan Hansen

For Personal Use ONLY

Brief Instructions Pertaining to Ignition, Starting and Lighting Units

☞ *(See illustration on opposite page)*

These instructions are intended solely to be of assistance to the truck user in the event of trouble while operating or while in service on the road. Any major overhauling or adjustment should be done by experts at United Motors Service Branches or Service Stations or consult an International Harvester Company Service Station. However, there are times when minor difficulties are encountered and these, as a rule, are due solely to loose connections or defective terminals in the wiring system and may be readily taken care of by observing the following:

If the engine runs but misses at times, look for:

WIRING—**(A)** Battery terminals loose or corroded.
(B) High tension cable grounded or loosely connected.
(C) Low tension cable grounded or loosely connected.

DISTRIBUTOR—Contact points not set right.

SPARK PLUG gap should be from .020″ to .025″. If misfiring is not confined to one cylinder, have coil tested, wiring checked and distributor inspected. If engine misses regularly on one cylinder, the trouble is usually due to the spark plug in that cylinder being dirty, broken or improperly adjusted.

If the starting motor turns the engine but no spark or a weak spark is obtained at the spark plug, look for:

WIRING—High tension cables leading to spark plugs may be grounded or loosely connected.
(B) High tension cable may be grounded or loosely connected.
(C) Low tension cable may be grounded or loosely connected.

DISTRIBUTOR—Contact points either do not open or do not close.

IGNITION SWITCH—Does not make contact.

WEAK BATTERY—Starting motor will turn too slowly, also low voltage will give weak spark.

STARTING MOTOR—Turns too slowly. Examine all cable connections between battery and starting motor. Connections must be clean and tight.

If the starting motor will not turn over or turns over slowly when starting switch is closed, look for:

BATTERY—Weak or completely discharged. Keep electrolyte (distilled water) ½″ above plates in each cell.

WIRING—Loose or dirty battery connections. See that all cable connections between battery and starting motor are clean and tight.

STARTING SWITCH—Contact points burned or cables loose on terminal posts.

If ammeter does not show that generator is charging, look for:

GENERATOR—Commutator and brushes dirty or greasy. To clean use No. 00 sandpaper.

WIRING—Cable connections at relay and ammeter may be grounded or loosely connected. Also check cable connections at starting switch and battery.

RELAY—Points dirty, not properly adjusted or sticking. Relay base not grounded to generator frame.

LIGHTING SWITCH—FUSE

(D) A fuse is located on the back side of lighting switch. In case of trouble in the wiring system, examine to see if fuse is burned out. If a new fuse burns out immediately after being installed, have the wiring system thoroughly checked for a loose connection or short in the circuit.

DELCO-REMY UNITS—All electrical units are properly adjusted and inspected before leaving the factory and should not be tampered with. The Distributor is of the full automatic type and has the condenser incorporated thereon.

The Ignition Coil is of the non-condenser type.

The Starting Motor is the direct drive Bendix Drive type, using a manual type starting switch.

The Generator is set at the factory to the lowest possible charging rate and may be changed by a Service Station to suit conditions under which truck is working. The generator should never be set to have a charging rate above 17 amperes cold output.

John & Susan Hansen

For Personal Use ONLY

For Personal Use ONLY

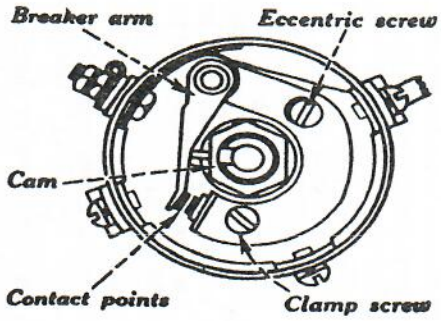

DISTRIBUTOR CONTACT POINTS

Adjustment of contact points can be made with a screw driver as follows:

Crank engine slowly until breaker arm rests on high points of cam lobe.

Loosen breaker arm clamp screw and turn eccentric screw until there is from .018" to .024" gap between contact points. *Be accurate - use a feeler gauge!*

After adjustment has been made, be sure to tighten clamp screw.

IGNITION TIMING

Before attempting ignition timing, see that gap between distributor breaker points is between .018" to .024". Points must be clean, free from pits and seating squarely on each other.

Remove number one spark plug. Crank engine by hand until number one piston is coming up on compression stroke. This can be determined by holding thumb over spark plug hole. When piston is coming up on compression stroke, a strong pressure will be felt, forcing thumb away from hole. From this point, turn crank slowly until timing notch on crankshaft pulley is directly in line with the timing pointer on gear case cover. If by chance when cranking, the notch is turned beyond pointer, start over by cranking engine until number one piston is again coming up on the compression stroke; continuing to crank until the notch and pointer are directly in line. This will prevent any back lash from affecting the timing.

Remove distributor cap and spark plug cables. Be sure that the distributor advance indicator is on the zero mark. Next loosen distributor clamp screw and turn distributor body clockwise until contact points just start to separate, with the breaker arm rubbing block on lead side of cam lobe. Lock distributor in this position by tightening the clamp screw. When turning the distributor body, lightly press the rotor in opposite direction of rotation so as to take up all backlash in the distributor drive. Replace the distributor cap.

The distributor is now in firing position for number one cylinder and number one spark plug cable must be assembled in the distributor cap in the terminal hole directly above the rotor. The firing order is 1-5-3-6-2-4 and spark plug cables must be assembled in the distributor cap in this order in an anti-clockwise rotation.

To recheck timing, turn on ignition switch and slowly crank engine until number one piston is coming up on the compression stroke. Hold the plug end of number one spark plug cable 1/4" from cylinder head and continue cranking very slowly until a spark occurs. At this point, timing notch on pulley should be directly opposite timing pointer on gear case cover. If these are not in line when spark occurs, distributor must be reset.

If fuel of a high anti-knock value is used regularly, slightly more economy can be obtained by advancing spark timing from the normal setting, which is zero on distributor adjustment indicator. If low grade fuel, or fuel low in anti-knock value, is used regularly, it may be necessary to slightly retard spark from the normal setting. The owner should consult an International Harvester Company Service Station before attempting to make any change from the normal setting.

NOTE: When the oil pump has been removed from the engine, it will be necessary to remove the ignition distributor, before re-installing the pump assembly. This is required to assure proper alignment of the distributor shaft with the oil pump shaft. Also it will be necessary to retime the ignition.

John & Susan Hansen

For Personal Use ONLY

PREST-O-LITE BATTERY

Examine the battery at least twice a month in summer and once a month in winter to see that the solution is kept to the proper level.
Acid or electrolyte should never be added except by a skilled battery man. Under no circumstances add any special battery "dopes", solutions or powders.
The electrolyte in each cell should be 1/2" above the separators and plates. When the electrolyte is below this level, pure distilled water should be added. Never use hydrant water which has been in a metal receptacle. Keep a bottle or jar of pure distilled water on hand for battery use only. To put water in a cell in which electrolyte is low, use a clean syringe.
Test specific gravity of the electrolyte in each cell at least once a month with a hydrometer. A hydrometer reading of 1.270 to 1.285 indicates a full charge. Never allow the battery to fall below 1.225 which indicates half discharged. A discharged battery will freeze at temperatures as high as 20° F. above zero. A fully charged battery, however, will withstand temperatures as low as 45° F. to 50° F. below zero.
Battery cable terminals must be clean and tight. Use hot water for removing terminal corrosion and for cleaning top of battery. Brighten terminal contact surface with wire wool, apply a light coat of vaseline and reassemble. Be sure terminals are clamped tightly and that battery is clamped securely in the battery box. If this is done two or three times a year, no trouble from corroded terminals should be experienced.

Guarantee and Service Adjustment Certificate (not for Export)

A certificate is furnished with the battery on all Prest-O-Lite equipped trucks. This certificate entitles the truck owner to service as described on the reverse side.

For Export (Dry Batteries) Complete instructions are included with Battery.

SPARK PLUGS

Trucks when leaving the factory are equipped with standard service "AC" spark plugs. When the operation of the truck is severe it is sometimes necessary to change to severe service spark plugs. Before making any change consult an International Harvester Company Service Station.

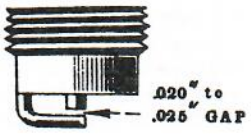

Keep spark plugs free from carbon. Gap between points should be set at .020" to .025".
(Be accurate - use a feeler gauge!)
When changing the gap, always bend the outer electrode, never bend the center electrode. For good performance, it is recommended that spark plugs be replaced every 10,000 miles.

LOVEJOY SHOCK ABSORBERS

Always use Genuine Lovejoy Shock Absorber Fluid.

Check the fluid level every 10,000 miles. Fluid must be kept up to bottom of filler plug hole. An actual leak will cause a shortage of fluid, which can easily be determined by disconnecting the arm linkage and pulling the arm down. If the arm moves easily a part of the stroke, then comes to a stop and moves slowly for the remainder of the stroke, there is not enough fluid in the absorber.

When replenishing fluid, wipe around filler opening before removing plug in order to remove all dirt; should dirt enter a complete disassembly will be necessary to remove all trace of dirt. Disconnect link between axle and absorber arm. Fill absorber to proper level moving arm up and down several times, forcing out any air in the cylinder. Add fluid and repeat operations until no more can be added.

John & Susan Hansen

For Personal Use ONLY

NOTE:- This section contains instructions and illustrations pertaining to certain adjustments which can be made.

To obtain best results, the owner should consult an International Harvester Company Service Station before attempting a general overhauling or when any mechanical difficulties occur.

ENGINE

COMPRESSION

Compression in all cylinders should be equal. Loss of compression is probably due to worn cylinders, worn pistons and rings, imperfect seating of valves, too little clearance between ends of valve tappets and stems or by carbon deposits on the valve seats.

REMOVING CYLINDER HEAD AND GASKET

Drain the water and disconnect upper hose at radiator. Disconnect spark plug cables at spark plugs and heat indicator cable at engine unit. Remove cylinder head stud nuts and lift off the horn and spark plug cable brackets. With a heavy screw driver pry up on cylinder head on lug provided on front end and tap with a lead hammer until the head is loose and can be lifted easily. Do not drive a chisel or screw driver between cylinder head and block, as the gasket will be ruined. When replacing the cylinder head gasket, use a little heavy grease or suitable sealing compound to cover the gasket all over.

REMOVING CARBON

After removing the cylinder head, carbon deposits can be scraped easily from piston heads and cylinder head by using a sharp edged tool. Do not attempt to remove carbon by burning out with oxygen. This is a very unreliable method and will result in damaging the cylinder head gasket and pistons.

It is advisable, whenever removing carbon, to grind the valves. If the engine is carbonized to a great extent examine the piston rings, as usually they will be found carbonized tight in the grooves. This carbon must be removed and the rings should have free play in their grooves.

VALVE GRINDING

Remove valve cover plate from side of engine and with a suitable valve spring lifter, raise valve springs and remove valve spring seat keys or locks.

Be careful that keys do not drop through into the crankcase. If they do, it means removing the oil pan, an unnecessary operation when grinding valves.

VALVE TAPPET ADJUSTMENT

Proper clearance for extreme service is .010" intake and exhaust when engine is hot. For ordinary service and where the slight increase in tappet noise with the wider clearance is objectionable, tappets may be set at .006" intake and .008" exhaust. This closer setting will necessitate more frequent adjustment of tappets.

Caution: Settings closer than the minimum mentioned will result in hard starting, high fuel consumption and burned valves.

(BE ACCURATE - USE A FEELER GAUGE!)

John & Susan Hansen

For Personal Use ONLY

REPLACING GASKET AND CYLINDER HEAD

Carefully inspect the gasket for flaws or signs of gas blowing between perforations and see that the asbestos is of even thickness throughout.

If the gasket shows signs of failure, a new gasket must be used. Whether a new or old gasket is used, it must be covered on both sides with cup grease or suitable sealing compound. Carefully place the gasket in position on the studs, with the smooth side up as stamped on gasket, and press it down carefully. Be sure that no foreign matter is adhering to the gasket or to the surface of the cylinder block.

Tighten down nuts in center of head first, working both ways towards the end as shown in illustration. This is important and will insure freedom from strains in the cylinder head casting and possibly a water leak.

After the engine has been running a few minutes, tighten the nuts down firmly again. (Be sure to fill the radiator with clean soft water before starting the engine.)

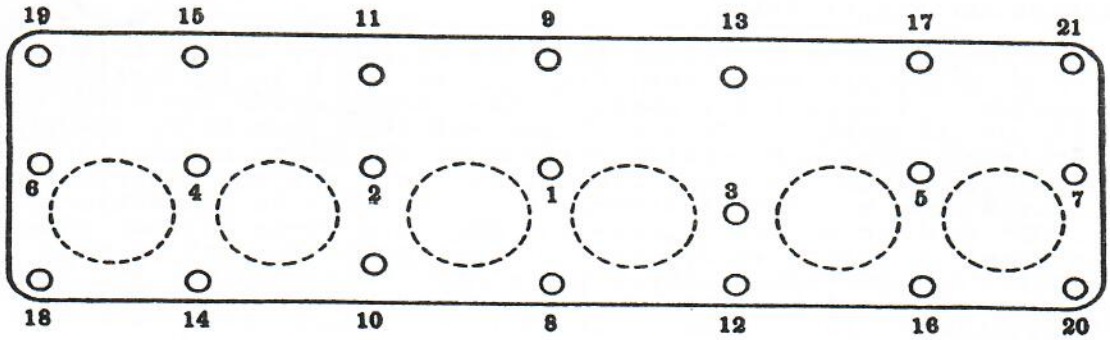

When replacing gasket and cylinder head, tighten nuts in the order shown.

ADJUSTING THE CONNECTING ROD BEARINGS

The work of adjusting the connecting rod bearings should be undertaken only by an expert mechanic in a properly equipped service station.

Consult an International Harvester Service Station before attempting an overhauling.

The factory setting for clearance between the connecting rod bearing and crankshaft is .001" to .0025". A side clearance of .005" to .009" is allowed.

The connecting rods are fitted with five .003" shims which permits adjustment for bearing wear up to .0075". The connecting rod or cap should never be filed; if bearing wear cannot be adjusted by removing shims, it is of extreme importance that new bearings be installed. Do not assemble cap with shims all on one side.

John & Susan Hansen

For Personal Use ONLY

REMOVING PISTONS

To remove pistons from cylinder block, remove cylinder head and oil pan. With connecting rod cap removed, piston and rod assembly may be pushed out thru top of block.

REMOVING PISTON RINGS

With piston and connecting rod assembly out of the engine, it is easy to remove the piston rings, as follows:

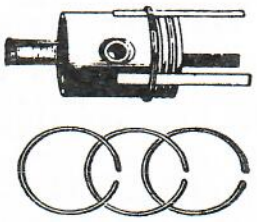

Removing Piston Rings.

Hold the assembly by clamping the connecting rod in a vise. If it is caught just beneath the piston, the vise will prevent the piston moving while working on it. Place three metal strips under top piston ring having two strips set a short distance from joint in ring and have third strip set directly opposite joint. This spreads ring evenly all the way around, thus allowing ring to be removed without breaking. Take off all rings in the same manner. After rings are removed, clean out all carbon in ring grooves on piston as it will be impossible to fit new rings if carbon is allowed to remain in grooves.

FITTING NEW PISTON RINGS

New rings should be fitted into the cylinders before trying to place them on the pistons. When fitting new rings in the cylinder put the piston in the cylinder ahead of the rings. Push the rings against the top of the piston. This will prevent them from being out of square with cylinder bore, and a false reading of the joint clearance will be avoided. When the rings are square, both oil and compression rings should have a joint clearance of .012" (with an allowable variation of .005" smaller or .010" larger). Side clearance between rings and grooves in piston should be .001" to .0025" for oil control ring and .0015" to .003" for compression rings.

PISTON PINS

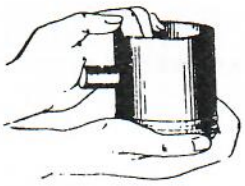

Fitting Piston Pin.

After removing the connecting rod and piston, test the pin for looseness in the piston bosses. A loose pin will cause a knock, in which case replacement is necessary. Pin is held in place by a snap ring at each end. Piston pin should be palm-push fit, at normal room temperature (70° F.).

NOTE: It is very important when reaming bearings in the piston pin bosses, to see that holes are reamed smoothly and in perfect alignment, so pin will fit properly.

Consult an International Harvester Company Service Station before attempting a general overhauling or when any mechanical difficulties occur.

John & Susan Hansen

For Personal Use ONLY

Care and Adjustment of Hydraulic Brakes

Never reline the brake shoes. Use "Exchange" replacement shoes with lining assembled and burnished to a perfect circle. This will assure a satisfactory job at a cost comparable with that of relining. When installing new or relined shoes, they should be replaced only in sets, and while it is not recommended, an individual shoe may be replaced. The truck owner should understand that individual shoe replacements are made at his own risk.

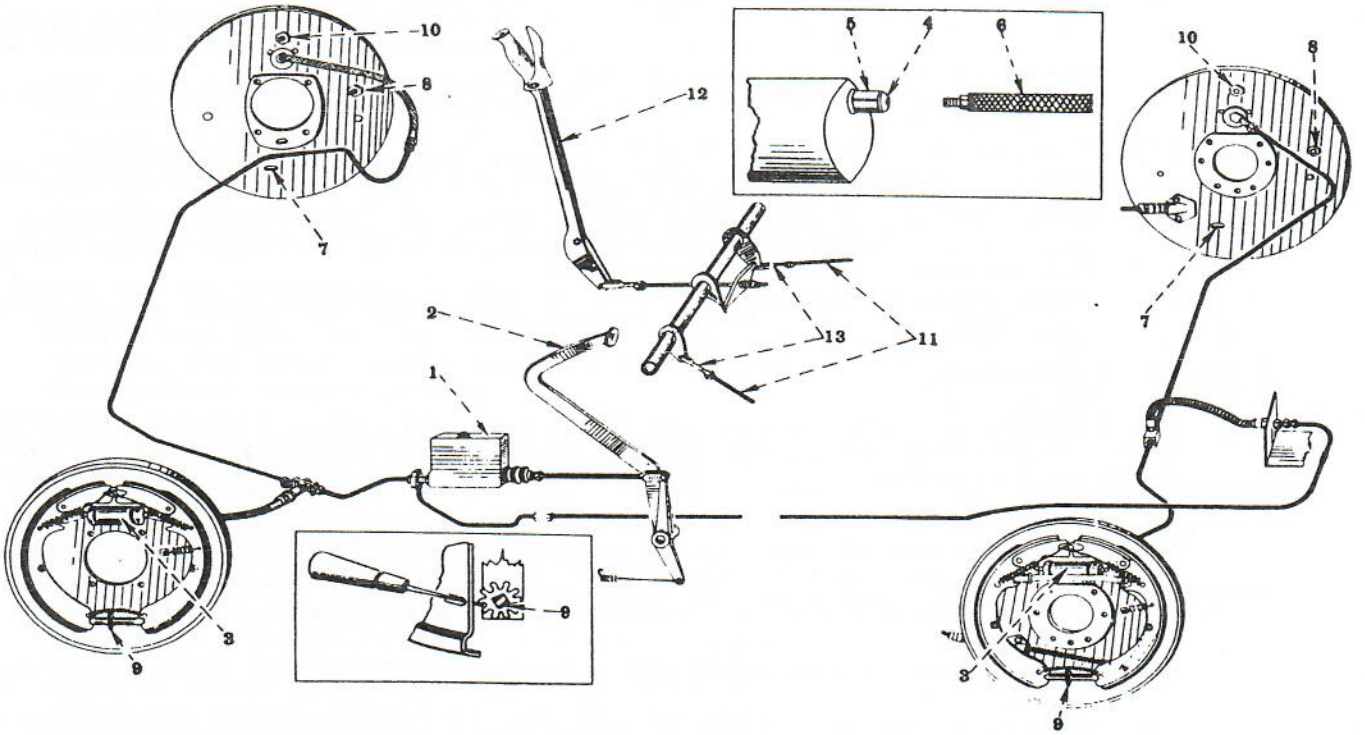

Always use Genuine "Lockheed" fluid. The use of other than Genuine "Lockheed" fluid or the introduction of mineral base oil into the system will cause rubber parts to swell and become inoperative.

Inspect master cylinder (1) each one thousand miles for correct fluid level. Fluid should be within 3/8" from bottom of filler neck.

Do not fill supply tank to top of filler neck.

Caution: When removing supply tank filler cap, extreme care must be used to prevent dirt from entering master cylinder.

BRAKE PEDAL ADJUSTMENT

When brake control system is in release position, foot brake pedal (2) should have 1/4" free travel before the pressure stroke starts. This free travel is required to prevent blocking of bypass port in master cylinder.

Should bypass port become blocked, brakes will drag due to pressure building up in system. Should all brakes drag, pressure may be relieved by removing screw (4) from bleeder (5) and unscrewing bleeder three-quarters of a turn. Foot brake pedal should travel approximately 1-1/2" to 2-1/2" to apply the brakes, if shoe clearance is correct.

☞ *Keep all lubricant and brake fluid away from brake lining.*

John & Susan Hansen

For Personal Use ONLY

CARE AND ADJUSTMENT OF HYDRAULIC BRAKES - Continued

(See Illustration on page 15)

ADJUSTMENT FOR WEAR

(a) Jack up wheel and have brake control system in release position.
(b) Remove brake adjusting hole cover(7) and on D-15 trucks the feeler gauge hole cover from brake drum.
(c) Loosen lock nut on eccentric adjustment (8).
(d) Turn eccentric in the same direction that wheel revolves when truck is moving forward, until a decided brake drag is felt when wheel is being pulled over by hand.
(e) Turn eccentric in the opposite direction until wheel is just free of brake drag.
(f) Tighten eccentric lock nut.
(g) Using a screw driver, turn adjusting screw (9) until brake shoes are solidly against brake drum.
(h) Back off adjusting screw until there is .010" drum to lining clearance. Clearance can be checked with a feeler gauge thru feeler gauge hole in brake drum.
(i) Make this adjustment at each of the four wheels.

MAJOR ADJUSTMENTS

The following instructions are necessary only when fitting replacement shoes or when instructions under "Adjustment for Wear" fail to give satisfactory results.

During the inspection or disassembly of brake shoes, the hydraulic control position of the system should be left intact so that bleeding of the lines will not be required. The brake pedal must never be depressed at any time when the brake drums are not in place.

(a) Jack up wheel and have the brake control system in release position.
(b) Remove brake adjusting hole cover (7) and on D-15 trucks the feeler gauge hole cover from brake drum.
(c) Loosen lock nut on eccentric adjustment (8).
(d) Insert a .010" feeler gauge in the inspection hole in brake drum and turn brake drum so that the feeler gauge is between lining and drum at adjusting screw end of the secondary (rear) shoe.
(e) Turn eccentric in same direction that wheel revolves when truck is moving forward, until the feeler gauge is snug.
(f) Loosen lock nut on anchor pin (10) one complete turn. (Rear brakes on D-15 trucks have two anchor pins).
(g) With a screw driver or suitable tool, turn anchor pin in the desired direction and turn eccentric until .010" lining to drum clearance is obtained at each end of the secondary (rear) shoe.
(h) Tighten anchor pin lock nut as tight as possible with a 16" wrench; also tighten eccentric lock nut.
(i) Using a screw driver, turn adjusting screw (9) until brake shoes are solidly against brake drum.
(j) Back off adjusting screw until there is .010" drum to shoe clearance.
(k) Make this adjustment at each of the four wheels.

Consult an International Harvester Company Service Station before attempting a general overhauling or when any mechanical difficulties occur.

☞ *Keep all lubricant and brake fluid away from brake lining.*

John & Susan Hansen

For Personal Use ONLY

CARE AND ADJUSTMENT OF HYDRAULIC BRAKES - Continued

(See Illustration on page 15)

BLEEDING THE LINES

Any air inside the hydraulic system must be removed. Whenever a line has been disconnected at master cylinder, the entire system must be bled at all four wheels until all air is completely expelled. When a line has been disconnected at any wheel cylinder (3) both wheel cylinders must be bled.

Air in the system will cause a springy, rubbery action of the brake pedal. Should a sufficient quantity be introduced into the system, the brake pedal will go to the toe board under normal pressure.

Fill master cylinder supply tank with *Genuine "Lockheed" fluid* and see that it is kept at least half full during entire bleeding operation.

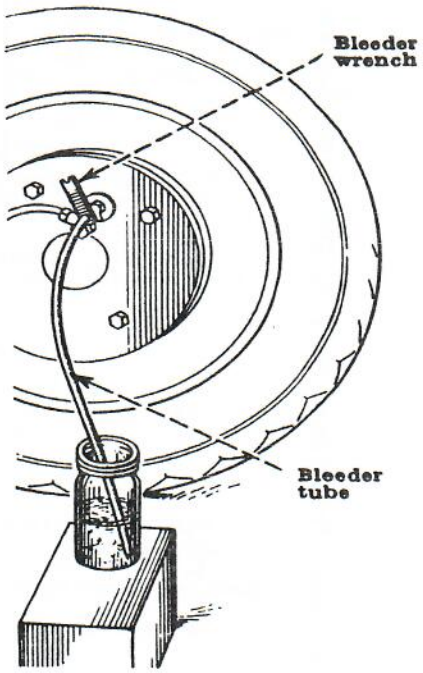

Remove screw (4) from end of bleeder connection (5) and attach bleeder tube (6). Allow tube to hang in a clean container, such as a pint glass jar. Unscrew bleeder connection three-quarters of a turn and depress brake pedal by hand, allowing pedal to return slowly. Pumping the brake pedal forces fluid out into glass jar and carries with it any air which might be present in the system. Watch flow of fluid from tube, the end of which should be kept below surface of fluid in glass jar, and when all air bubbles cease to appear or when stream is a solid fluid mass, close bleeder connection.

Fluid withdrawn in "bleeding" operation should not be used again. Fluid should be replenished in supply tank after each cylinder is bled. Should supply tank be drained during bleeding operation, air will enter the system and rebleeding will then be necessary.

HAND BRAKE ADJUSTMENT

The hand brake cables (11) should be adjusted when it becomes necessary to adjust the brake shoes. Pull hand lever (12) back two notches on ratchet. Shorten brake cables by removing clevis pins and turning adjustable yokes (13) until a slight brake drag is felt at rear wheels.

This will leave the brakes free when hand lever is released.

Caution: Never attempt to adjust the hand brake by adjusting brake shoes.

☞ *Keep all lubricant and brake fluid away from brake lining.*

John & Susan Hansen

For Personal Use ONLY

LUBRICATION CHART

USE ONLY HIGH QUALITY LUBRICATING OILS AND GREASE.
SELECT ONLY THOSE RECOGNIZED MANUFACTURE.

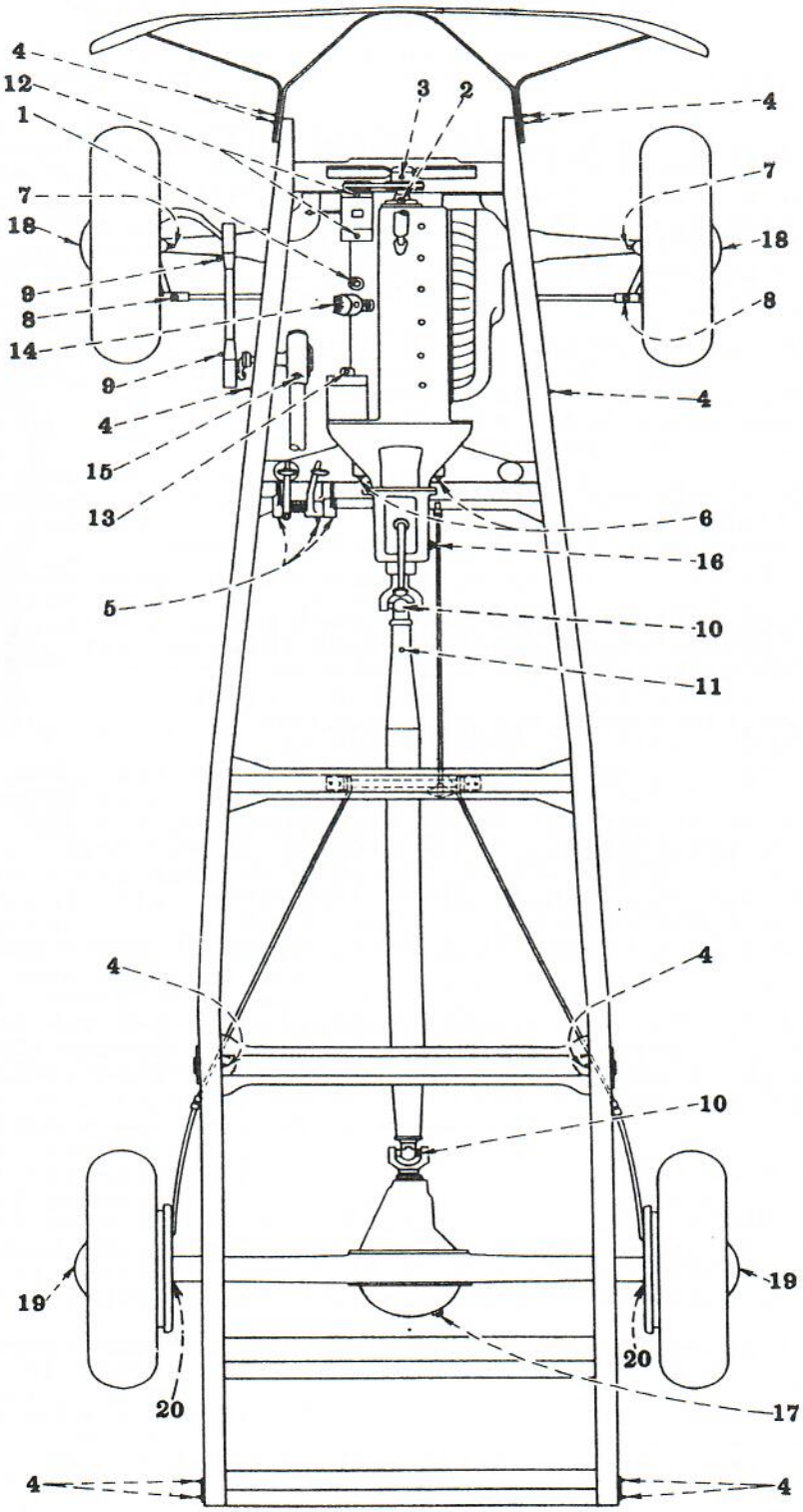

SHOCK ABSORBERS - Have Service Station check fluid level every 10,000 miles (see page 11).

SPRING LEAVES - Use Engine oil and paint edges with a stiff brush or use a spray gun every 1000 miles.

John & Susan Hansen

For Personal Use ONLY

LUBRICATION CHART

Paragraphs are numbered to correspond with numbers on illustration:-

1. Engine (check daily)

When oil becomes dirty or thin, drain and refill with new high grade oil. Keep oil to proper level. (Capacity is 6 quarts, U.S.)
Note: Cold weather requires new oil more often because of using choke, which thins the oil.

ENGINE OILS

For summer weather:-

Moderate Service. . . . . .Use SAE 30-40
Severe or high speed service. . . . . .Use SAE 40-50

For winter weather (all classes of service):-

Temperatures down to 20° above zero (Fahrenheit). . . .Use SAE 20-30
Temperatures lower than 20° above zero (Fahrenheit). . . .Use SAE 10

Every 500 Miles

2. Water Pump Shaft . . . . . Fill grease cup with a good grade of *WATER PUMP GREASE* and turn down one-half turn.

3. Fan Front Bearing. . . . . 8 drops of light ENGINE OIL in oiler.

Every 500 to 1000 Miles

4. Spring Pins. . . . . .
5. Clutch and Brake Pedal Shaft . .
6. Clutch Release Fork Shaft. . . .
7. Steering Knuckle (upper and lower) . . . . . .
8. Tie Rod Ends . . . . . .
9. Drag Link Ball Joints. . . . . .

Use a viscous CHASSIS LUBRICANT or SAE-160 GEAR OIL.

10. Propeller Shaft Universal Joint.
11. Propeller Shaft Slip Yoke. . . .

Use a viscous CHASSIS LUBRICANT or SAE-160 GEAR OIL. Remove pipe plug, insert fitting and fill with lubricant. Replace pipe plug.

12. Generator. . . . . .
13. Starting Motor . . . . . .

4 to 5 drops of light ENGINE OIL in oilers.

14. Distributor. . . . . Fill grease cup with a viscous *CHASSIS LUBRICANT* and turn down one turn. Apply one drop of light *ENGINE OIL* to breaker arm pivot and to felt wick under rotor. Apply a thin coat of *VASELINE* to breaker arm rubbing block.

15. Steering Gear Case . . . . . *Use GEAR OIL.*

16. Transmission (capacity 3 pints, U.S.) . . . . . .
17. Differential (D-2 capacity 4 pints, U.S.) . . . (D-15 capacity 4½ pints, U.S.). .

Use GEAR OIL. Inspect every 1000 miles and keep oil up to level of filler plug. Drain and refill with new oil every 10,000 miles. For warm climate use SAE-160 and for cold climate use SAE-90.

Every 10,000 Miles

18. Front Wheel Bearings (D-2 & D-15)
19. Rear Wheel Bearings (D-15). . . .

Remove wheels, clean hubs and repack with *SHORT FIBER WHEEL BEARING GREASE.*

20. Rear Axle Shaft Bearings (D-2). .

Use a viscous CHASSIS LUBRICANT. Do not force too much lubricant into bearing.

John & Susan Hansen

For Personal Use ONLY

Important Instructions for Storing a Truck

When a truck is not to be used for a period of time, it should be placed in a dry and protected place and the following procedure should be observed:

1. Wash the truck and completely lubricate the chassis (refer to lubrication chart).
2. Drain the engine oil, flush system and refill with new oil. Run the engine until the oil is thoroughly circulated.
3. Remove storage battery and put in a dry place.
4. Drain and flush radiator and cooling system. BE SURE all drain cocks are open.
5. After the engine has become cold, remove the spark plugs and pour a small quantity of SAE-50 engine oil in each cylinder thru the plug holes. Then turn the engine over by hand a few times to thoroughly distribute the heavy oil over the pistons and cylinder walls. BE SURE to replace spark plugs.
6. Drain fuel tank, carburetor and fuel pump.
7. Clean air cleaner and refill to indicated level with new oil.
8. For trucks with hydraulic brakes, be sure fluid system is full.
9. Block up truck so that weight is off the tires.

The following procedure should be followed when a truck is returned to service:

1. Close drain cocks and fill cooling system with water (use anti-freeze if required). Check all hose and water pump connections for water leaks.
2. Fill fuel tank and check condition of fuel filter glass bowl gasket. Gasket must form a good seal or pump will not supply fuel to carburetor.
3. Install storage battery (see page 11 for battery maintenance instructions).
4. Check level of oil in air cleaner.
5. Check oil level in engine. Remove spark plugs and pour a small quantity of light engine oil in each cylinder thru spark plug holes. Turn engine over by hand a few times and then replace spark plugs.
6. Check fluid level in brake master cylinder.
7. Check oil level in transmission, rear axle and any auxiliary unit.
8. Check air pressure in all tires.

John & Susan Hansen

For Personal Use ONLY

Illustrations and Parts List.

The following pages contain detailed illustrations of various units and reference numbers only appear. When ordering parts use the IHC Part No. shown in list opposite the "Ref. No." and to avoid errors and delays always give Chassis Serial Number and Model of Truck. Particular attention should be given to the location of bolts, capscrews, washers, etc., so that they are replaced in the holes from which they were removed. This covers only "standard" units, as "special" units will be found in the "Special Equipment" book.

John & Susan Hansen

For Personal Use ONLY

ENGINE (3-5/16 x 4-1/8")
IHC Model HD-213 - D-2 Trucks
IHC Model HD-213A - D-15 Trucks

CYLINDER HEAD, CRANKCASE, OIL PAN

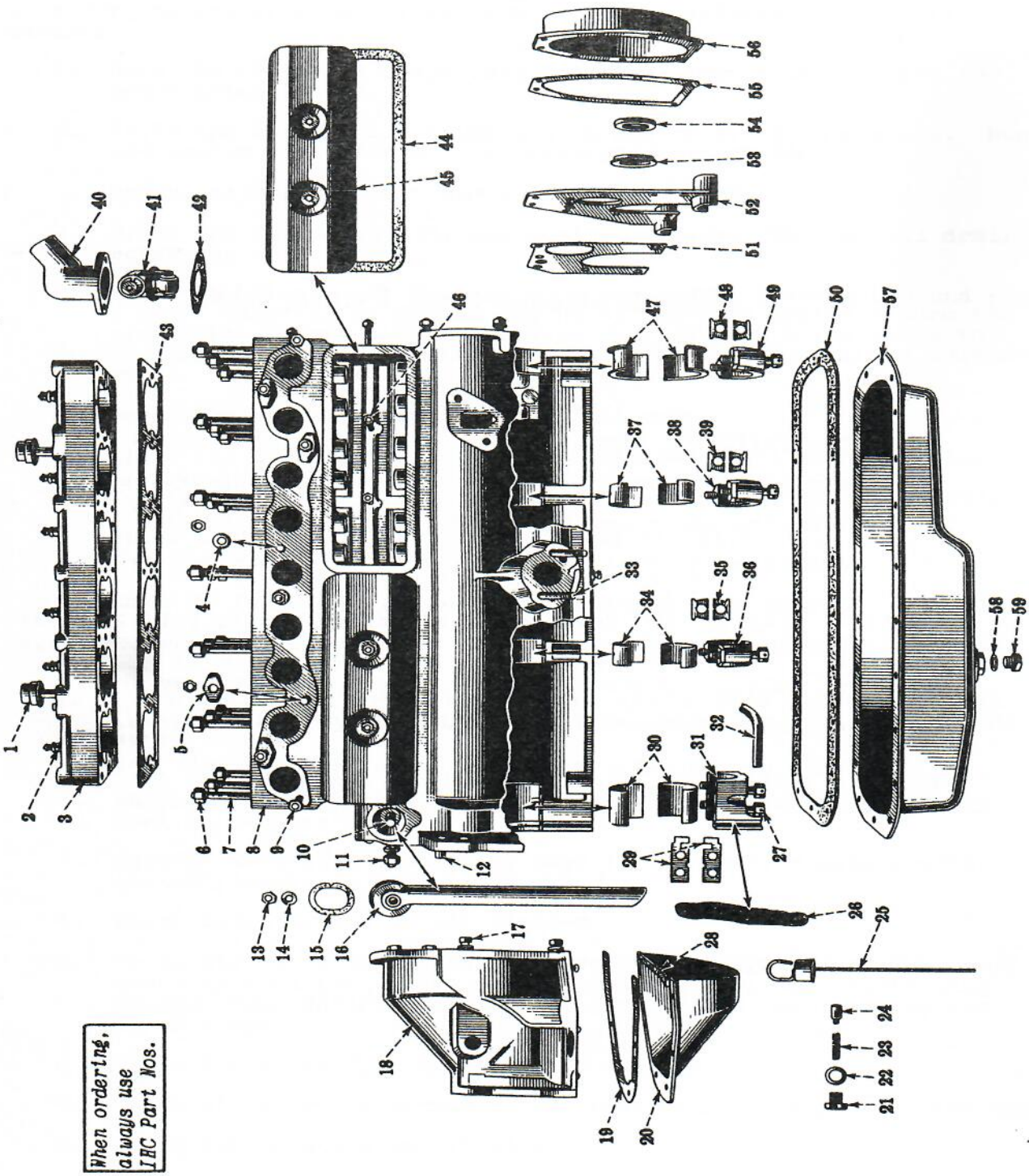

When ordering, always use IHC Part Nos.

Unnumbered parts in the illustrations are the same as corresponding parts shown with number.
(See opposite page for IHC Part Nos.)

John & Susan Hansen

When ordering, always use IHC Part Nos.

Index to Reference Nos. appearing in illustrations on opposite page.

Ref. No.	I H C Part No.		Ref. No.	I H C Part No.	
1	60836 H	Breather	29	64415 HA	Shim
2	46628 HA	Spark plug	30	1727 YB	Bearing (Std.)rear
3	67000 HA	Head	31	1730 YAX	Cap
	67001 HA	Head (high altitude)	32	1737 Y	Tube
4	1888 Y	Washer	33	1696 Y	Stud
5	60844 H	Clamp	34	1717 YB	Bearing (Std.)third
6	1763 Y	Nut	35	64414 HA	Shim
7	42101 H	Stud - long	36	1720 YA	Cap
	1762 YA	Stud - short	37	1707 YB	Bearing (Std.)second
8	1690 YNX	Block (less pistons)	38	1710 YA	Cap
	1690 YOY	Block (with pistons)	39	64414 HA	Shim
9	23375 V	Stud - intermediate	40	60846 H	Water outlet
	1886 Y	Stud - long	41	41980 H	Thermostat (145° to 150°), Std.
	1887 Y	Stud - short		49863 H	Thermostat (170° to 175°).
10	52726 V	Stud	42	41991 H	Gasket
11	30981 H	Stud	43	54390 HA	Gasket
12	54808 H	Dowel	44	1754 Y	Gasket
13	.....	Nut, 3/8"	45	62519 HX	Cover
14	1746 Y	Gasket	46	62498 H	Stud
15	1748 Y	Gasket	47	56729 H	Bearing (Std.)front
16	1744 YA	Ventilator	48	64414 HA	Shim
17	1770 Y	Capscrew	49	1698 YA	Cap
18	61646 HB	Housing	50	1783 Y	Gasket
19	65241 H	Gasket	51	61811 H	Gasket
20	61642 HX	Cover	52	60848 HX	Support plate
21	59547 H	Retainer	53	1867 Y	Retainer
22	1928 Y	Washer	54	1866 Y	Packing
23	1926 Y	Spring	55	1863 Y	Gasket
24	1925 YA	Plunger	56	1862 YEX	Front cover (D-2)
25	1750 YA	Gauge		66299 H	Front cover (D-15)
26	1738 Y	Packing	57	1773 YEX	Oil pan
27	1739 Y	Capscrew	58	3405 H	Gasket
28	62517 H	Felt	59	41300 HA	Plug

73176 HA - Package - Gasket overhaul set for lower crankcase.
73178 H - Package - Gasket overhaul set for cylinder head.

John & Susan Hansen
For Personal Use ONLY

For Personal Use ONLY

ENGINE (3-5/16 x 4-1/8")
IHC Model HD-213 - D-2 Trucks
IHC Model HD-213A - D-15 Trucks

CRANKSHAFT, FLYWHEEL, CONNECTING RODS, PISTONS, etc.

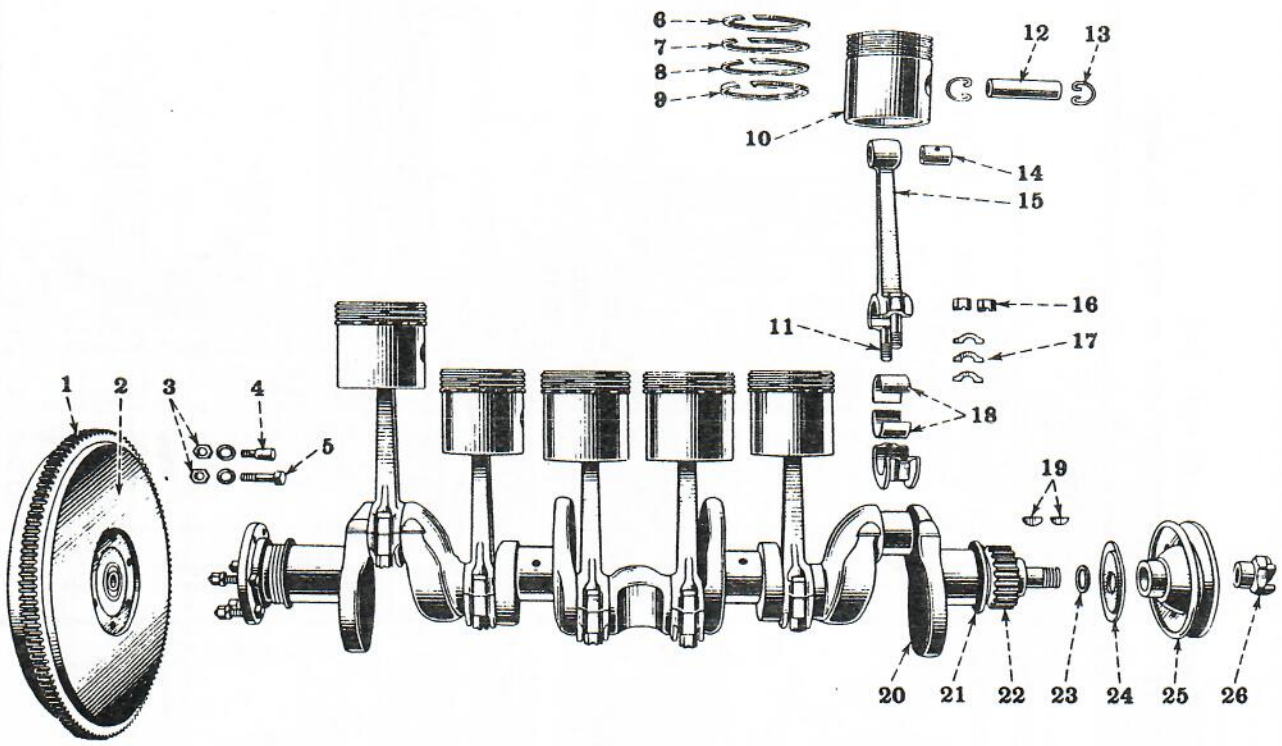

Unnumbered parts in the illustrations are the same as corresponding parts shown with number.

Ref. No.	IHC Part No.		Ref. No.	IHC Part No.	
1	60825 H	Ring gear	14	50292 H	Bushing
2	60826 HX	Flywheel	15	60832 HX	Connecting rod
3	21937 V	Nut	16	1832 YA	Nut
4	1791 YA	Dowel	17	64116 H	Shim
5	1789 Y	Bolt	18	1823 YF	Bearing (Std.)
6, 7, 8	1807 Y	Piston Rings, (standard), (compression)	19	7220 T	Key
			20	1784 YF	Crankshaft
			21	1787 Y	Washer
9	50903 H	Piston ring (oil) (standard)	22	1786 Y	Chain sprocket
			23	1793 Y	Gasket
10	1797 YAX	Piston	24	1792 YA	Oil slinger
11	64115 HAX	Bolt	25	1794 YB	Pulley (D-2)
12	1803 Y	Pin (standard)		46066 HA	Pulley (D-15)
13	1819 Y	Retainer	26	41266 HB	Starting crank nut

77412 H - Set of overhaul piston rings (standard).

When ordering, always use IHC Part Nos.

John & Susan Hansen

For Personal Use ONLY

ENGINE (3-5/16 x 4-1/8")
IHC Model HD-213 - D-2 Trucks
IHC Model HD-213A - D-15 Trucks

CAMSHAFT, SPROCKET, CHAIN, VALVES, TAPPETS, ETC.

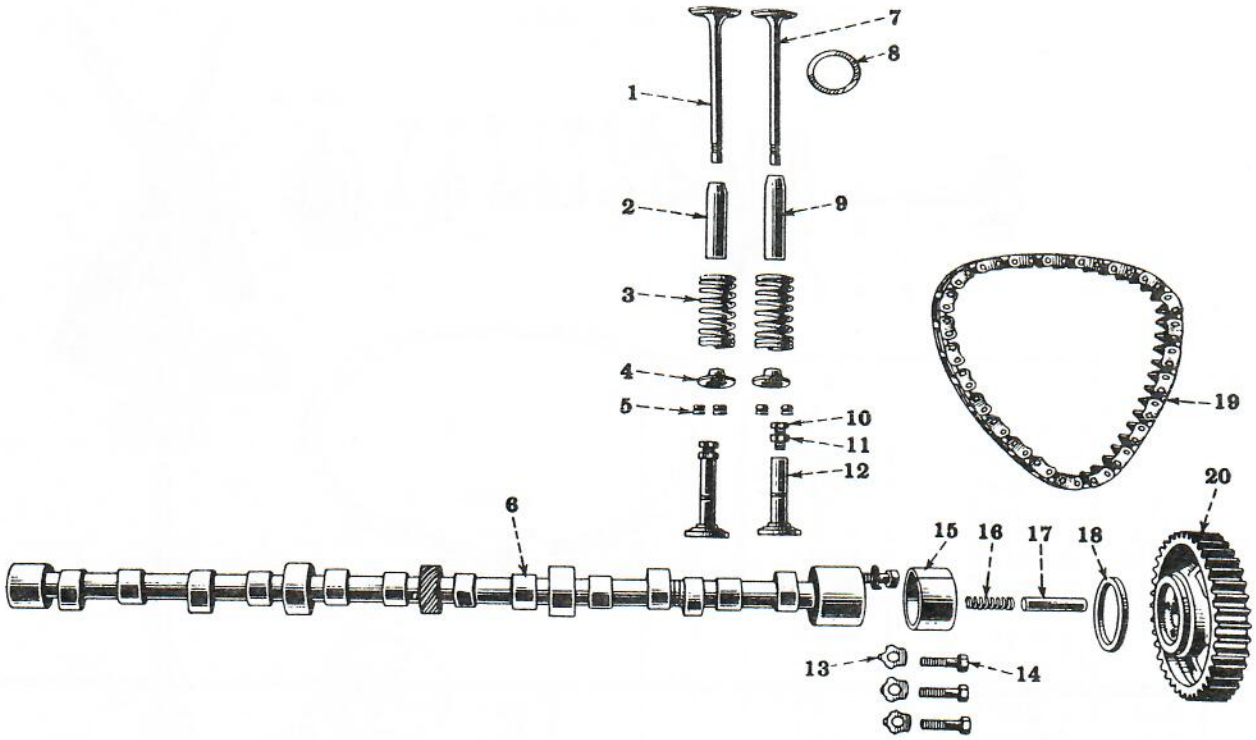

Unnumbered parts in the illustrations are the same as corresponding parts shown with number.

Ref. No.	I H C Part No.		Ref. No.	I H C Part No.	
1	48060 H	Intake valve(Std.)	11	1859 YA	Nut
2	50281 H	Intake guide	12	1852 YB	Tappet
3	52982 H	Valve spring	13	1835 Y	Lockwasher
4	48066 H	Retainer	14	71498 H	Capscrew
5	48067 H	Lock	15	1741 Y	Bushing (export)
6	1833 YB	Camshaft		1742 Y	Bushing
7	80171 HA	Exhaust valve(Std.)	16	1838 Y	Spring
8	1691 Y	Valve seat insert (Std.)	17	1837 Y	Plunger
			18	1836 Y	Washer
9	50280 HA	Exhaust guide	19	1840 Y	Chain
10	1858 Y	Screw	20	1834 Y	Sprocket

When ordering, always use IHC Part Nos.

John & Susan Hansen

For Personal Use ONLY

ENGINE (3-5/16 x 4-1/8")
IHC Model HD-213 - D-2 Trucks
IHC Model HD-213A - D-15 Trucks

WATER PUMP, FAN, FAN BELT

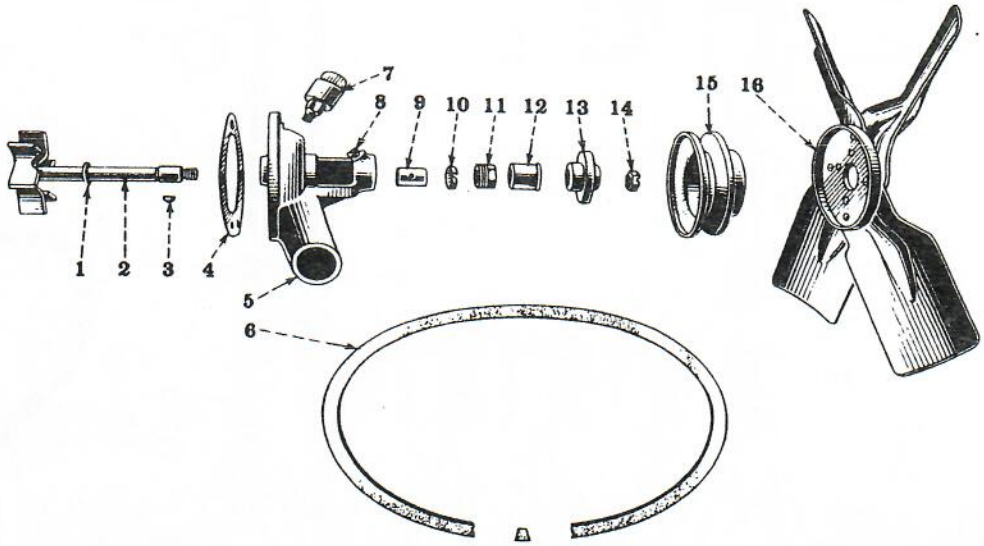

Ref. No.	I H C Part No.		Ref. No.	I H C Part No.	
1	61818 H	Washer	10	34263 HA	Packing
2	61820 HX	Shaft	11	57314 H	Nut
3	4167 T	Key	12	45090 H	Bushing
4	60837 H	Gasket	13	64567 H	Hub
5	61817 HAX	Body	14	.....	Nut, 1/2"
6	1895 Y 46065 H	Fan Belt (D-2) Fan belt (D-15)	15	69194 H 69193 H	Pulley (D-2) Pulley (D-15)
7	32006 VA	Grease cup	16	61453 H 66675 H	Fan (D-2) Fan (D-15)
8	27311 D	Oiler			
9	61819 H	Bushing			

When ordering, always use IHC Part Nos.

John & Susan Hansen

For Personal Use ONLY

ENGINE (3-5/16 x 4-1/8")
IHC Model HD-213 - D-2 Trucks
IHC Model HD-213A - D-15 Trucks

OIL PUMP AND OIL FLOAT

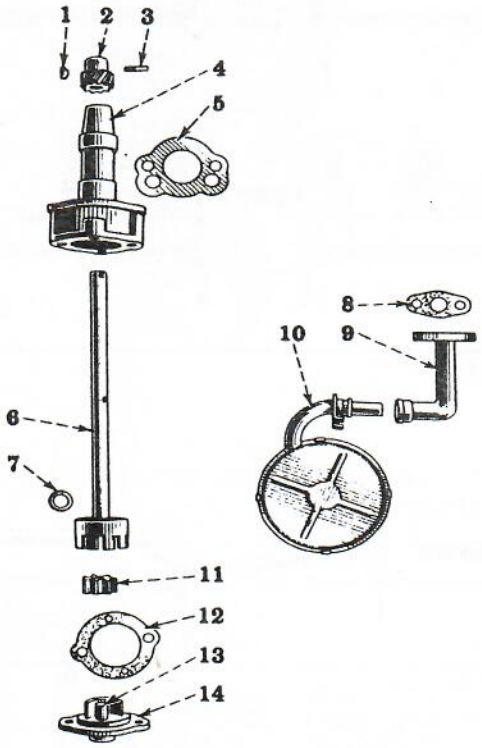

Ref. No.	I H C Part No.	
1	4167 T	Key
2	1920 Y	Gear
3	1921 Y	Pen
4	1912 Y	Body
5	1922 Y	Gasket
6	44255 HA	Shaft
7	1916 Y	Washer
8	1924 Y	Gasket
9	1923 YA	Support
10	1931 YA	Float
11	44224 HB	Pinion
12	1919 Y	Gasket
13	1563 H	Pin
14	1918 YAX	Cover

When ordering, always use IHC Part Nos.

John & Susan Hansen

For Personal Use ONLY

ENGINE (3-5/16 x 4-1/8")
IHC Model HD-213 - D-2 Trucks
IHC Model HD-213A - D-15 Trucks

INTAKE AND EXHAUST MANIFOLDS

Ref. No.	I H C Part No.	
1	1876 Y	Gasket
2	2159 YA	Insulator
3	66453 H	Gasket
4	64930 H	Capscrew
5	62305 H	Gasket
6	61978 HAX	Exhaust Manifold
7	23343 V	Stud
8	62301 HX	Intake Manifold
9	1872 Y	Stud

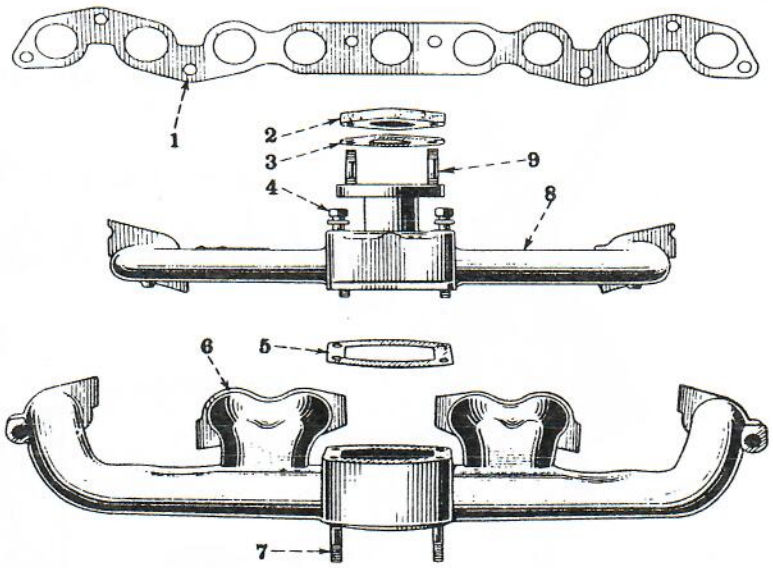

MUFFLER, EXHAUST PIPE, TAIL PIPE

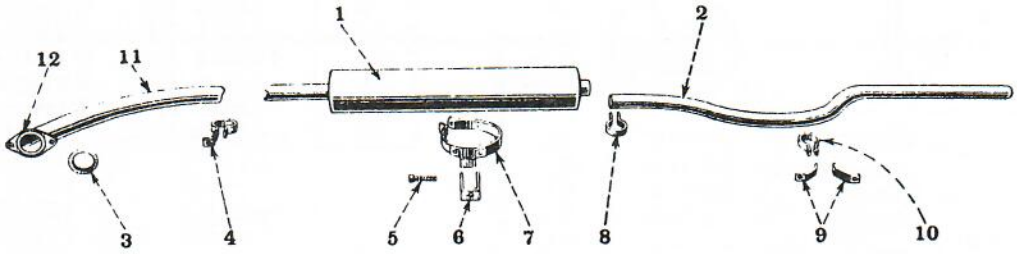

Ref. No.	I H C Part No.	
1	58162 HAX	Muffler
2	62320 H	Tail Pipe (113" and 125" W.B.)
	62321 H	Tail Pipe (130" W.B.)
3	41823 H	Ring
4	68744 H	Support
5	61390 V	Bolt
6	62317 H	Bracket
7	62319 HX	Strap
8	62838 HA	Clamp
9	62318 H	Bracket
10	62316 H	Clamp
11	62327 HA	Exhaust pipe (113" W.B.)
	62328 HA	Exhaust pipe (125" and 130" W.B.)
12	41815 H	Flange

When ordering, always use IHC Part Nos.

John & Susan Hansen

For Personal Use ONLY

RADIATOR AND CONNECTIONS

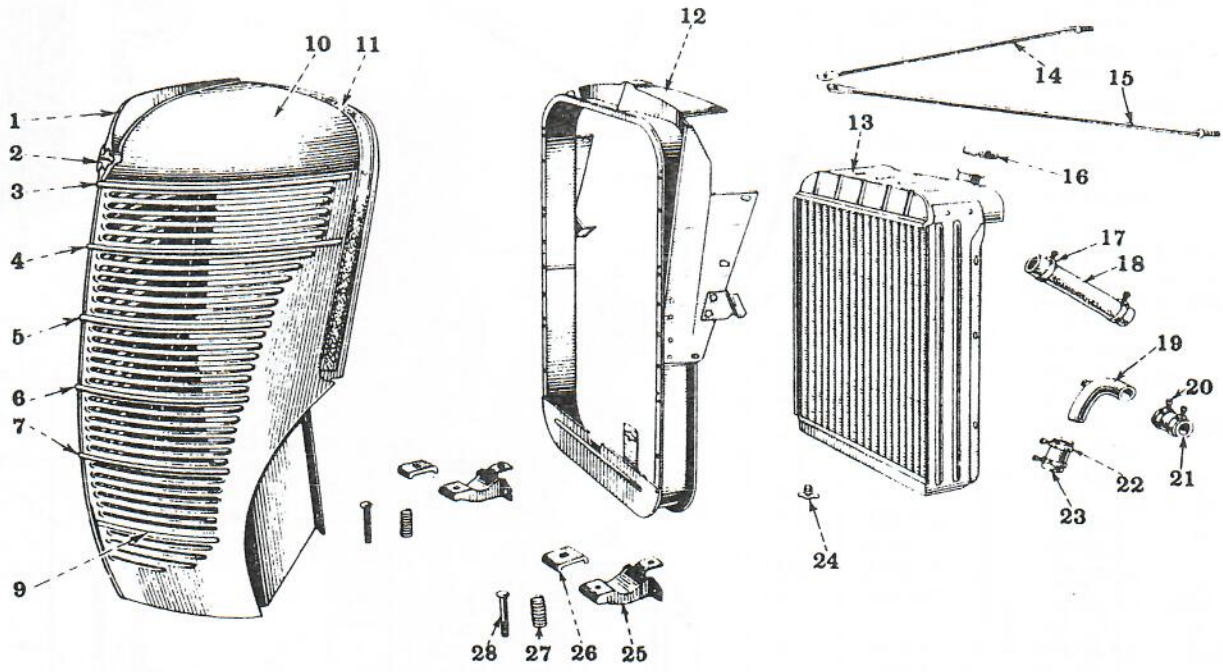

Unnumbered parts in the illustrations are the same as corresponding parts shown with numbers.

Ref. No.	I H C Part No.		Ref. No.	I H C Part No.	
1	65730 HA	Ornament	14	66081 HA	Rod
2	65783 HB	Name plate	15	66082 HA	Rod
3	65632 H	Moulding	16	64185 H	Cap
4	65633 H	Moulding		65197 H	Cap gasket
5	65634 H	Moulding	17	39143 H	Clamp
6	65635 H	Moulding	18	64230 H	Inlet hose
7	65636 H	Moulding	19	64225 HX	Tube (D-2)
9	65638 H	Moulding		66669 HX	Tube (D-15)
10	65902 H	Shell	20	39143 H	Clamp (D-2)
11	65788 H	Lacing		39192 H	Clamp (D-15)
12	65857 HA	Core support	21	50286 H	Hose (D-2)
13	64221 HA	Core - standard capacity(D-2)		43508 V	Hose (D-15)
	68178 HA	Core - large capacity(D-2)	22	39143 H	Clamp
	66654 HA	Core - standard capacity(D-15)	23	50286 H	Hose
	68180 HA	Core - large capacity(D-15)	24	2978 YA	Drain cock
			25	64227 HA	Bracket
			26	71609 H	Mounting pad
			27	24151 H	Mounting spring
			28	65829 HA	Mounting bolt

When ordering, always use IHC Part Nos.

John & Susan Hansen

ACCELERATOR PEDAL, THROTTLE AND CHOKE CONTROL, FUEL TANK AND PIPING

Ref. No.	I H C Part No.	
1	66209 H	Air cleaner
2	61620 HB	Carburetor
3	62652 H	Fuel pipe
4	5630 TM	Elbow
5	65506 H	Fuel pipe
6	2161 YB	Fuel pump
7	9109 H	Union
8	62654 H	Vacuum pipe
9	▲43527 HA	(Distributor vacuum control (681 E)
10	65501 H	(Fuel pipe (113" W.B.)
	65502 H	(Fuel pipe (125" W.B.)
	65503 H	(Fuel pipe (130" W.B.)
11	64574 HBX	(Fuel tank (13½ gals., U.S.)
	63467 H	(Lower filler neck gasket
	63474 H	Gauge gasket
	64571 H	Outlet unit
	65161 H	(Outlet unit gasket
	67094 HX	(Lower filler neck (113" and 125" W.B.)
	68423 H	Ground strap
	69056 H	(Lower filler neck (130" W.B.)
12	67092 HAX	Filler neck-upper
13	67097 H	Filler cap
	61060 V	Cap gasket
14	62854 HA	Pedal (L.H.D.)
15	62853 HX	(Cross shaft (L.H.D.)
16	62830 HA	(Throttle wire (L.H.D.)
17	62827 HA	Choke wire
18	66453 H	Gasket
	2159 YA	Insulator
19	70541 H	Rod (L.H.D.)
20	5630 TM	Elbow
21	52275 H	Accelerator button (R.H.D.)

Ref. No.	I H C Part No.	
22	62974 HX	Cross shaft (R.H.D.)
23	62929 HA	Throttle wire (R.H.D.)
24	62978 HX	Rod (R.H.D.)
25	36942 H	Throttle stop

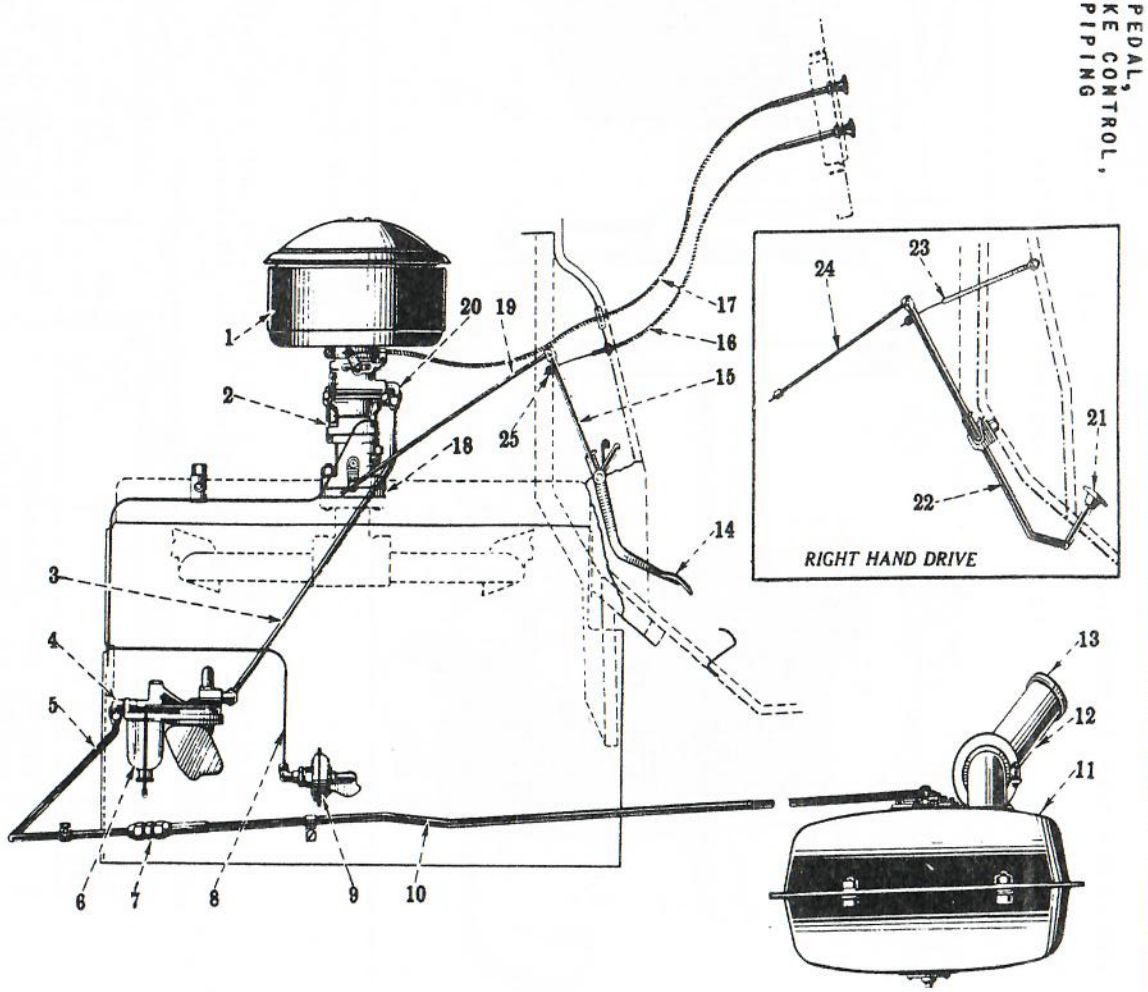

When ordering, always use IHC Part Nos.

▲– *Delco-Remy Unit*

John & Susan Hansen

For Personal Use ONLY

For Personal Use ONLY

Carburetor (Zenith Model 23-AV-10) (61620 HB)

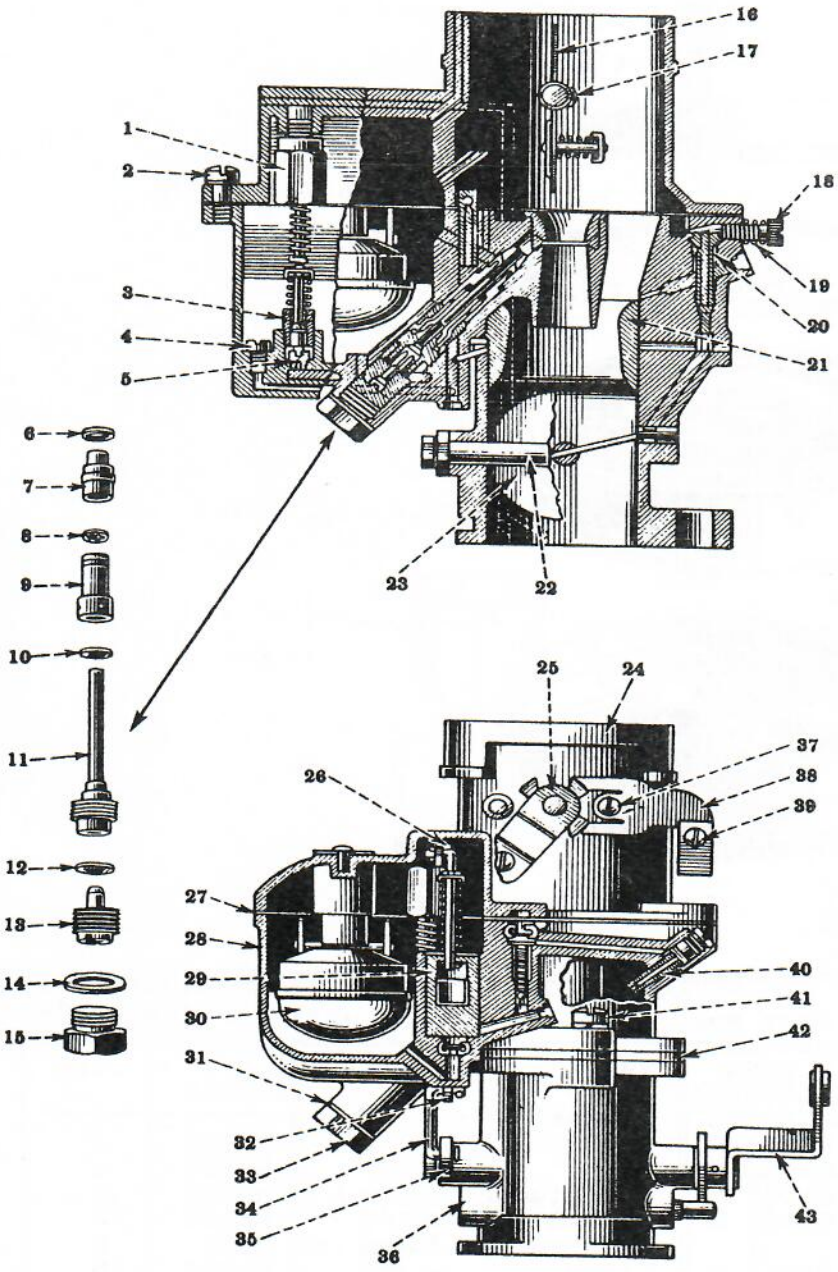

Ref. No.	I H C Part No.	
1	35508 D	Cylinder
2	30573 D	Screw
3	36389 D	Power jet valve #13
4	31140 D	Compensator No. 20
5	36388 D	Power jet #17
6	31847 D	Washer
7	35503 D	Tip
8	35269 D	Cap jet calibration #4D
9	35270 D	Cap jet base #1
10	12431 D	Washer
11	36509 D	Retainer
12	36508 D	Washer
13	35263 D	Main jet #15
14	35527 D	Washer
15	35515 D	Plug
16	30577 D	Air shutter
17	30574 D	Screw
18	30593 D	Screw
19	30594 D	Spring
20	35267 D	Idling jet #13
21	35262 D	Venturi #26
22	35831 D	Throttle shaft
23	35830 D	Plate
24	36507 DB	Cover
25	30579 D	Air shutter shaft
26	35833 D	Rod
27	35841 DA	Gasket
28	35827 DA	Bowl
29	36615 D	Piston
30	35507 D	Float
31	35527 D	Washer
32	35833 D	Rod
33	35515 D	Plug
34, 35	35832 D	Lever
36	38032 D	Body
37	30572 D	Screw
38	30578 D	Bracket
39	12434 D	Screw
40	35835 D	Accelerator jet #13
41	21207 D	Screw
42	35840 D	Gasket
43	36548 D	Lever
..	36863 D	Main jet adjuster (for high altitude)

When ordering, always use IHC Part Nos.

John & Susan Hansen

For Personal Use ONLY

AIR CLEANER (AC-Oil Bath Type) (66209 H)

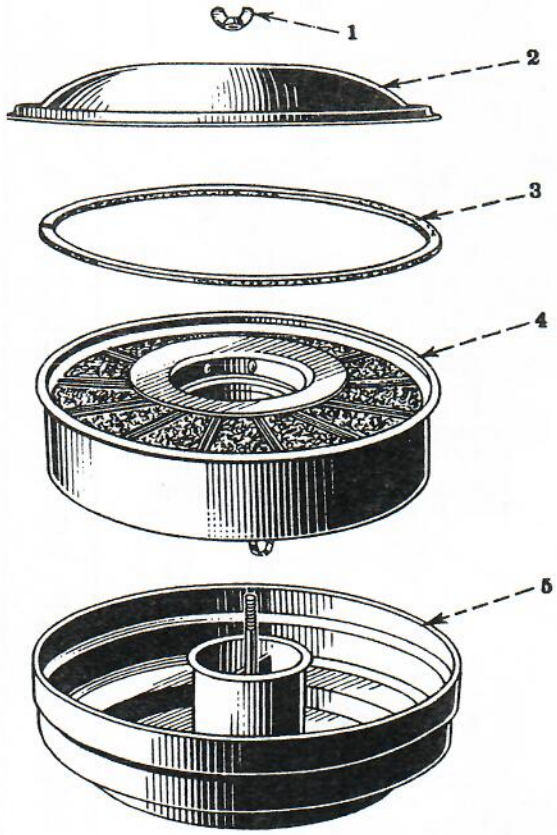

Ref. No.	I H C Part No.	
1	Q 3504	Nut
2	69078 HX	Cover
3	69080 H	Gasket
4	69081 H	Filter element
5	69089 HX	Pan
..	62097 H	Seal (under clamp)
..	69088 H	Gasket (filter element to tube)
..	81448 H	Clamp

When ordering, always use IHC Part Nos.

John & Susan Hansen

For Personal Use ONLY

FUEL PUMP (A-C)(3-1/8" Diameter Diaphragm) (2161 YB)

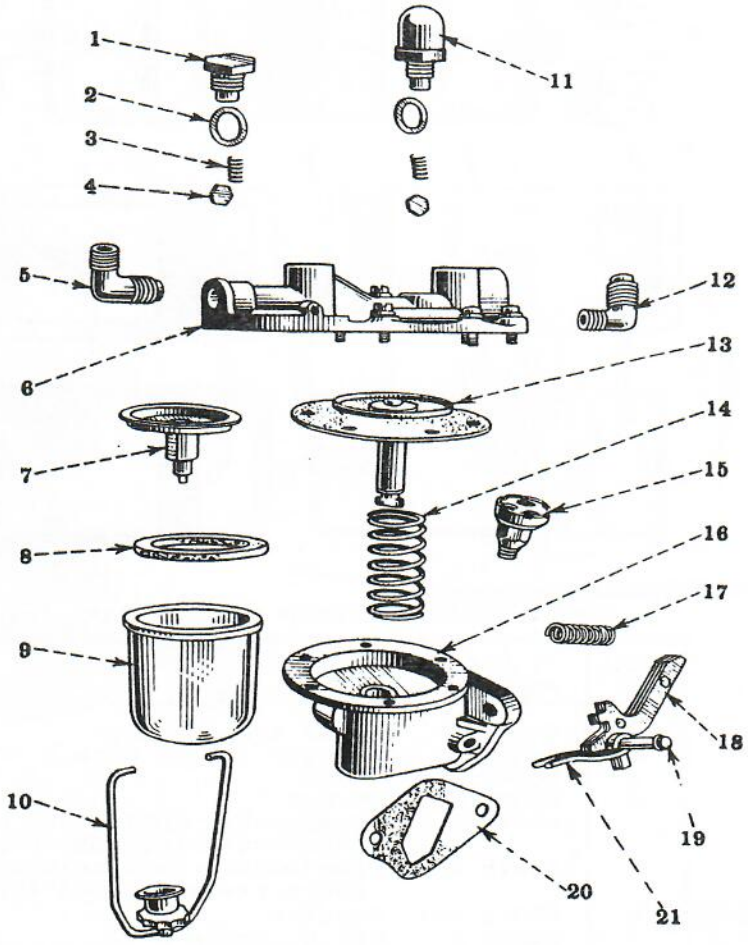

Unnumbered parts in the illustrations are the same as corresponding parts shown with number.

Ref. No.	I H C Part No.		Ref. No.	I H C Part No.	
1	23525 D	Plug	12	5630 TM	Elbow
2	23526 D	Gasket	13	32141 D	Diaphragm
3	26095 D	Spring	14	26964 D	Spring
4	23518 D	Valve	15	39624 HA	Breather
5	5630 TM	Elbow	16	23554 D	Body
6	23536 D	Cover	17	23547 D	Spring
7	33438 D	Filtering element	18	26966 D	Arm
8	51346 VA	Gasket	19	25481 D	Pin
9	51344 VA	Bowl	20	2163 Y	Gasket
10	51348 VA	Bail	21	24582 D	Linkage
11	23545 D	Plug	..	62470 H	Fuel pump shield

When ordering, always use IHC Part Nos.

John & Susan Hansen

For Personal Use ONLY

INSTRUMENT CLUSTER (65212 HA)

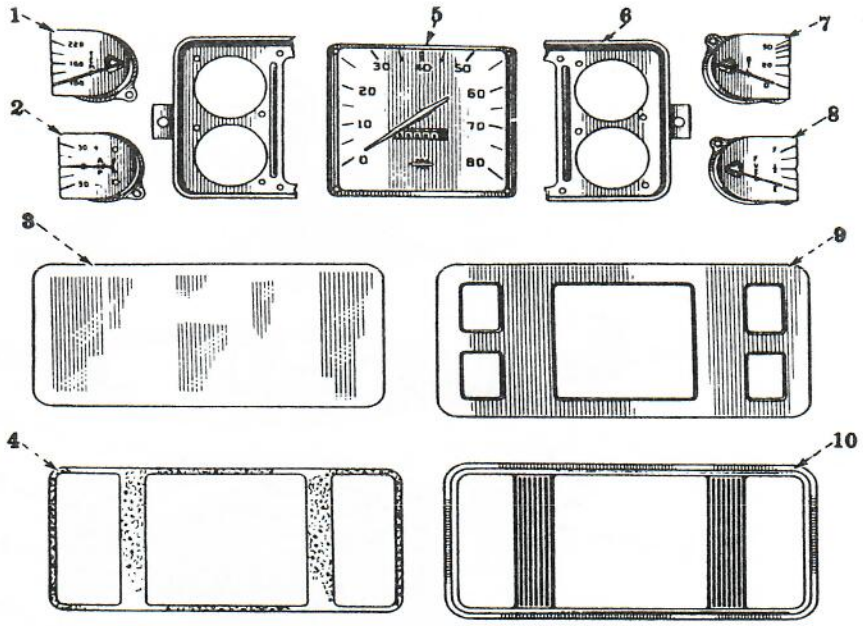

When ordering, always use IHC Part Nos.

Ref. No.	I H C Part No.	
1	64966 H	Water temperature
2	64954 H	Ammeter (30-30 amps.)
3	66580 H	Glass
4	66581 H	Gasket
5	63277 H	Speedometer (miles per hour) (Stewart-Warner 956 AV)
	63278 H	Speedometer (kilometers per hour) (Stewart-Warner 956 AV)
6	67021 HAX	Housing
7	64965 H	Oil pressure
8	64955 H	Fuel tank
9	66582 H	Mask
10	64967 H	Bezel

SPEEDOMETER CABLES

I H C Part No.	Stewart-Warner Part No.	
63279 H	94350-72	Cable assembly (67245 H, 67247 H)(for Right Hand Drive trucks with panel bodies or with station wagon bodies).
66985 H	94350-66	Cable assembly (67246 H, 67244 H)(not for trucks with panel bodies nor with station wagon bodies).
67244 H	G-64207-66	Cable core (part of 66985 H).
67245 H	G-64207-72	Cable core (part of 63279 H).
67246 H	G-94356-66	Cable conduit (part of 66985 H).
67247 H	G-94356-72	Cable conduit (part of 63279 H).
75207 H	94350-79	Cable assembly (75208 H, 75209 H)(for Left Hand Drive trucks-with panel bodies or with station wagon bodies)
75208 H	64207-79	Cable core (part of 75207 H).
75209 H	94356-79	Cable conduit (part of 75207 H).

See Page 8 for Wiring Diagram.

John & Susan Hansen

For Personal Use ONLY

HEAD LAMPS (Tilt Ray)
(65998 H - Black)
(67161 H - Chrome)

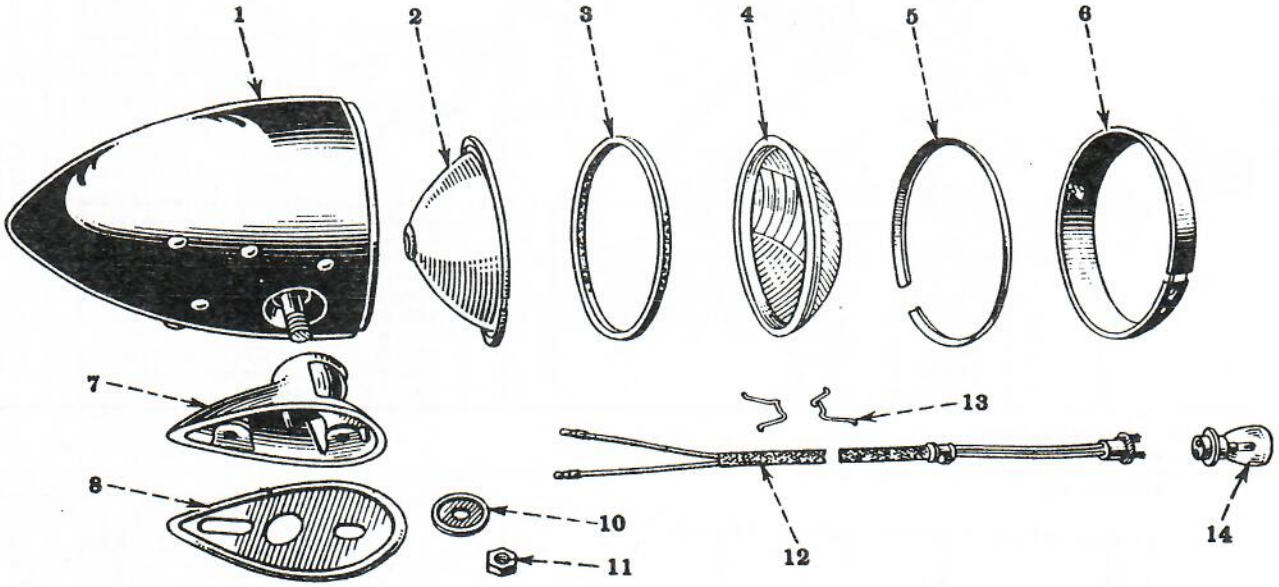

Unnumbered parts in the illustrations are the same as corresponding parts shown with numbers.

Ref. No.	I H C Part No.		Ref. No.	I H C Part No.	
1	69006 HX	Body (black)	8	65796 H	Pad
	69007 HX	Body (chrome)	10	50334 H	Washer
2	69029 H	Reflector	11	18352 D	Nut
3	69017 HX	Washer	12	69028 H	Wiring
4	69015 H	Lens	13	50539 H	Spring
5	69014 H	Ring	14	66339 H	Bulb (32-21 C.P.) (6-8 volt)
6	69009 HX	Moulding (black)		73097 H	Bulb (21-6 C.P.) (6-8 volt)
	69010 HAX	Moulding (chrome)			
7	76620 H	Bracket, right			
	76621 H	Bracket, left			

When ordering, always use IHC Part Nos.

See Page 8 for Wiring Diagram.

John & Susan Hansen

For Personal Use ONLY

STOP AND TAIL LAMP
One-Piece Red Lens
(50004 H)

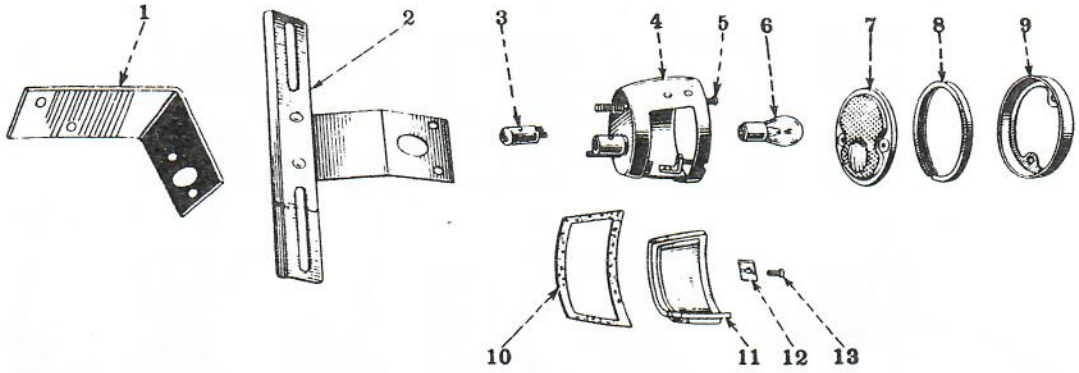

Ref. No.	I H C Part No.		Ref. No.	I H C Part No.	
1	67017 H 67018 H	Bracket (L.H.D.) Bracket (R.H.D.)	7	50501 H	Lens
2	42372 HX	License plate bracket	8	50502 H	Gasket
3	51003 H	Connector	9	50500 H	Retainer
4	50495 HX	Body	10	50503 H	Gasket
5	50530 H	Screw	11	50504 H	Outlook glass
6	37568 HA	Bulb	12	71673 H	Retainer
			13	18372 D	Screw

STOP AND TAIL LAMP
Two-Piece Lens { Red Tail Lamp / Orange Stop Lamp
(46410 H)

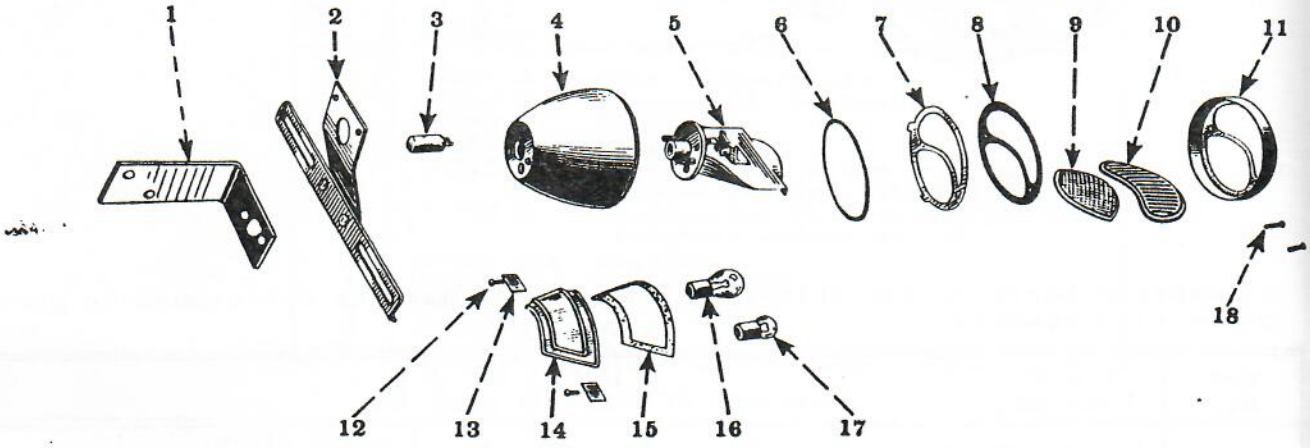

Ref. No.	I H C Part No.		Ref. No.	I H C Part No.	
1	68628 H 68629 H	Bracket (R.H.D.) Bracket (L.H.D.)	10	48006 H	Lens (orange)
2	46407 HX	License plate bracket	11	48003 H	Retainer
3	51003 H	Connector	12	42265 V	Screw
4	48002 H	Body	13	18368 D	Retainer
5	48009 H	Plate	14	48020 H	Outlook glass
6	48008 H	Gasket	15	48019 H	Gasket
7	48007 H	Plate	16	25955 H	Bulb (stop)
8	48004 H	Gasket	17	7494 H	Bulb (tail)
9	48005 H	Lens (red).	18	48021 H	Screw

When ordering, always use IHC Part Nos.

See Page 8 for Wiring Diagram

John & Susan Hansen

For Personal Use ONLY

CLUTCH CONTROL AND BRAKE PEDAL

Left Hand Drive Trucks only.

Ref. No.	I H C Part No.	
1	*81092 H	Master cylinder support bracket
2	1151 Y	Pad
3	81095 H	Brake pedal
4	81097 H	Clutch pedal
5	43589 H	Return spring
6	81091 H	Pedal shaft bracket
7	13021 D	Key
8	81085 HX	Pedal shaft
9	*81087 HX	Master cyl. rod
10	*81086 H	Pin
11	10764 V 81916 HX	Adj. yoke Release rod
12	10765 V	Yoke pin
13	7235 T	Key
14	*48638 H	Master cylinder
15	81917 H	Release lever
16	62355 H	Release fork shaft
17	62635 HA	Release fork
18	62357 HX	Release sleeve & bearing
19	46279 H	Clutch pilot bearing

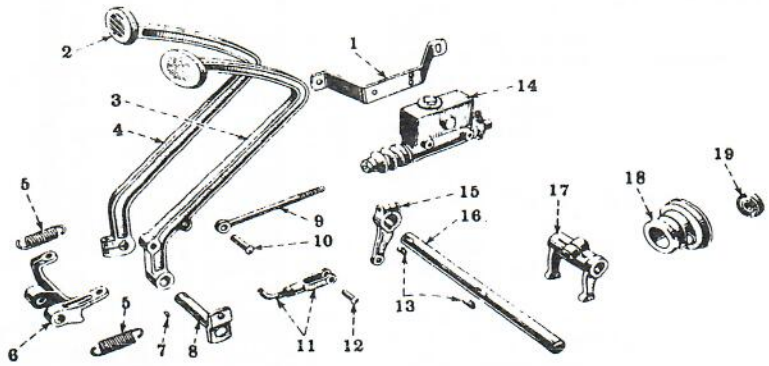

* - Hydraulic brake

Right Hand Drive Trucks only.

Ref. No.	I H C Part No.	
1	81096 H	Brake pedal
2	63251 H	Clutch pedal
3	*81092 H	Master cylinder support bracket
4	*48638 H	Master cylinder
5	46279 H	Clutch pilot bearing
6	62357 HX	Release sleeve & bearing
7	62635 HA	Release fork
8	81917 H	Release lever
9	62485 H	Release fork shaft
10	*62556 HX	Master cyl. rod
11	*25575 H	Pin
12	7235 T	Key
13	10765 V	Yoke pin
14	10764 V 81916 HX	Adj. yoke Release rod
15	81918 H	Release lever
16	13021 D	Key
17	1151 Y	Pad
18	62506 HB	Pedal return spring
19	22859 V	Pedal shaft spring
20	62486 H	Pedal shaft
21	62488 HA	Pedal shaft bracket

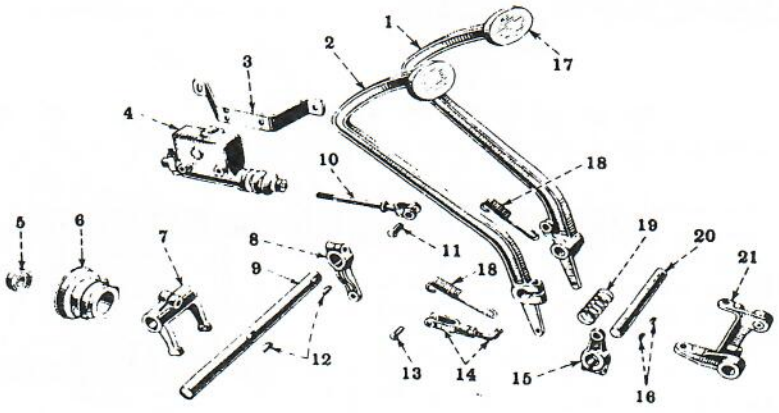

* - Hydraulic brake

John & Susan Hansen

For Personal Use ONLY

TRANSMISSION (3-Speed)
(61802 HA)
(IHC Model "HDS)

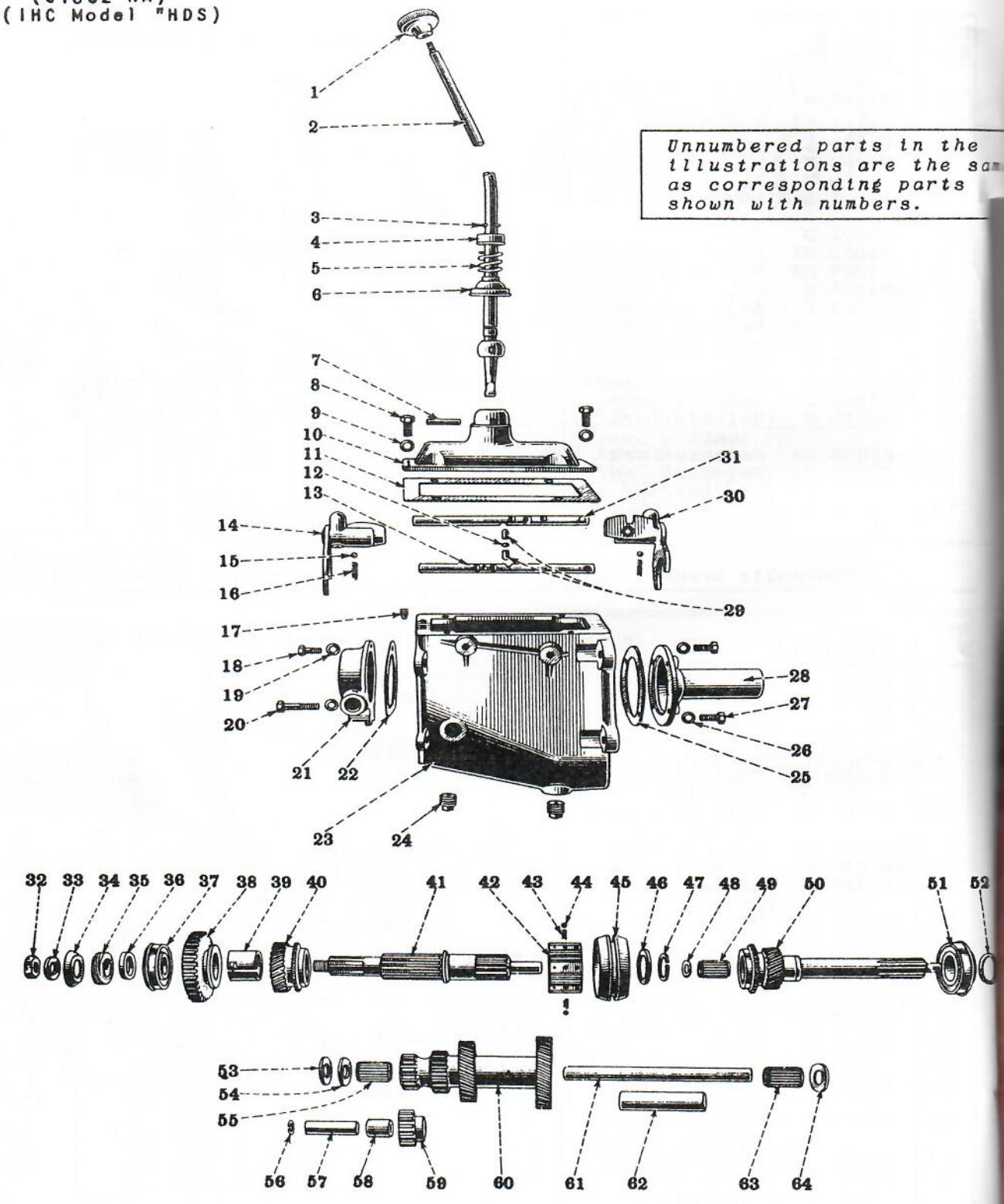

Unnumbered parts in the illustrations are the same as corresponding parts shown with numbers.

When ordering, always use IHC Part Nos.

John & Susan Hansen

For Personal Use ONLY

TRANSMISSION (3-Speed) (IHC Model HDS)(61802 HA)

Index to Reference Nos. appearing in illustration on opposite page.

Ref. No.	I H C Part No.		Ref. No.	I H C Part No.	
1	16780 H	Lever ball	33	62177 V	Washer
2	61880 HA	Lever	34	1959 Y	Oil thrower
3	1984 Y	Lock ring	35	50083 H	Speedometer drive gear (Stewart-Warner 74618)
4	1983 Y	Retainer	36	1977 Y	Spacer
5	1982 Y	Spring	37	42018 H	Ball bearing
6	1981 Y	Cap	38	51604 H	Low and reverse gear
7	1979 Y	Pin	39	60406 H	Bushing
8	Q 4017	Capscrew, 3/8"-16 N.C. x 7/8"	40	51606 HX	Second gear
9	.....	Washer, 3/8"	41	51603 HAX	Main shaft
10	51624 HA	Housing	42	51613 HAX	Clutch
11	51625 H	Gasket	43	51636 H	Spring
12	51638 H	Spacer	44	8623 T	Poppet ball, 1/4"
13	51628 H	Shift rail	45	51605 H	Sleeve
14	51633 HX	Shift fork	46	51608 H	Washer
15	13765 V	Poppet ball, 3/8"	47	51619 H	Lock ring
16	23074 H	Spring	48	51621 H	Spacer
17	51637 H	Lock screw	49	42016 HA	Bearing
18	Q 4017	Capscrew,3/8"-16 N.C. x 7/8"	50	61789 H	Main drive gear
19	.....	Washer, 3/8"	51	42017 H	Ball bearing
20	.....	Capscrew,3/8"-16 N.C. x 1-7/8"	52	1956 Y	Lock ring
21	66681 H	Retainer	53	51609 H	Washer (bronze)
22	51635 H	Gasket	54	51617 H	Washer (steel)
23	76408 H	Case	55	29582 H	Roller bearing
24	.....	Plug, 1/2"	56	1973 Y	Snap ring
25	51618 H	Gasket	57	1945 Y	Shaft
26	.....	Washer, 5/16"	58	1944 Y	Bushing
27	Q 1776	Capscrew,5/16"-18 N.C. x 1"	59	51610 HX	Reverse idler gear
28	61790 HA	Retainer	60	51612 H	Countershaft gear cluster
29	51632 H	Plunger	61	51615 H	Countershaft
30	51629 HX	Shift fork	62	51620 H	Spacer
31	51627 H	Shift rail	63	29582 H	Roller bearing
32	1106 Y	Propeller shaft nut	64	51609 H	Washer (bronze)
			...	26905 H	Speedometer driven gear bushing (Stewart-Warner No. 1870)
			...	63285 H	Speedometer drive sleeve (Stewart-Warner 93250)

CLUTCH (IHC Model R-10) (43772 HG)

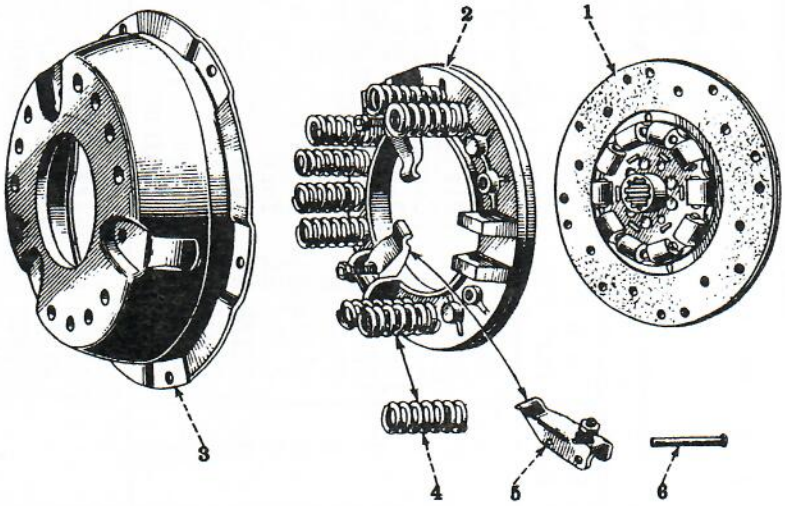

Ref. No.	I H C Part No.	
1	45459 HE 45464 HB	Facing plate Two facings
2	45458 H	Pressure plate
3	45457 H	Backing plate
4	68289 H	Spring
5	43919 HBX	Lever
6	29774 HA	Pin
...	53795 V	Clutch facing rivet
...	2094 Y	Clutch to flywheel screw

When ordering, always use IHC Part Nos.

John & Susan Hansen

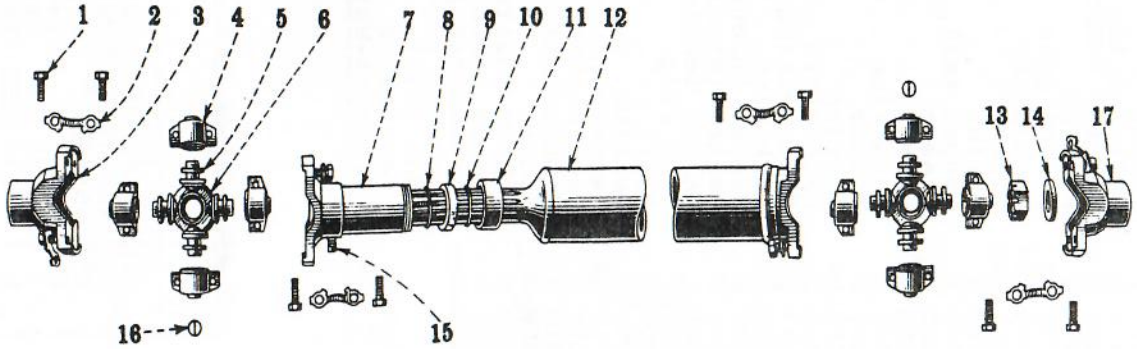

When ordering, always use IHC Part Nos.

Unnumbered parts in the illustration are the same as corresponding parts shown with numbers.

Ref. No.	IHC Part No.		Ref. No.	IHC Part No.	
1	38575 HA	Capscrew	12 ▲	61704 HX	Tube (D-2, 113" W.B.)
2	38562 H	Plate		61707 HX	Tube (D-2, 125" W.B.)
3	41248 H	Companion flange		73400 HX	Tube (D-15, 113" W.B.)
4	52718 HX	Bearing (with plug)	13	1106 Y	Nut (D-2)
	52719 HX	Bearing (plain)		13884 V	Nut (D-15)
5	38564 H	Washer	14	62177 V	Washer (D-2)
6	41249 HAX	Cross		.....	Washer, 29/32 x 1-5/8" (D-15)
7	41254 HX	Yoke	15	.....	Pipe plug, 1/8"
8	41159 H	Washer	16	20059 VA	Plug
9	20054 V	Felt	17	41248 H	Companion flange (D-2)
10	41159 H	Washer		44199 H	Companion flange (D-15)
11	41257 H	Retainer			

▲
- 61702 H Shaft complete less flanges (D-2, 113" W.B.)
- 61703 H Shaft assembly less front joint (D-2, 113" W.B.)
- 61705 H Shaft complete less flanges (D-2, 125" W.B.)
- 61706 H Shaft assembly less front joint (D-2, 125" W.B.)
- 73398 H Shaft complete less flanges (D-15, 113" W.B.)

John & Susan Hansen
For Personal Use ONLY

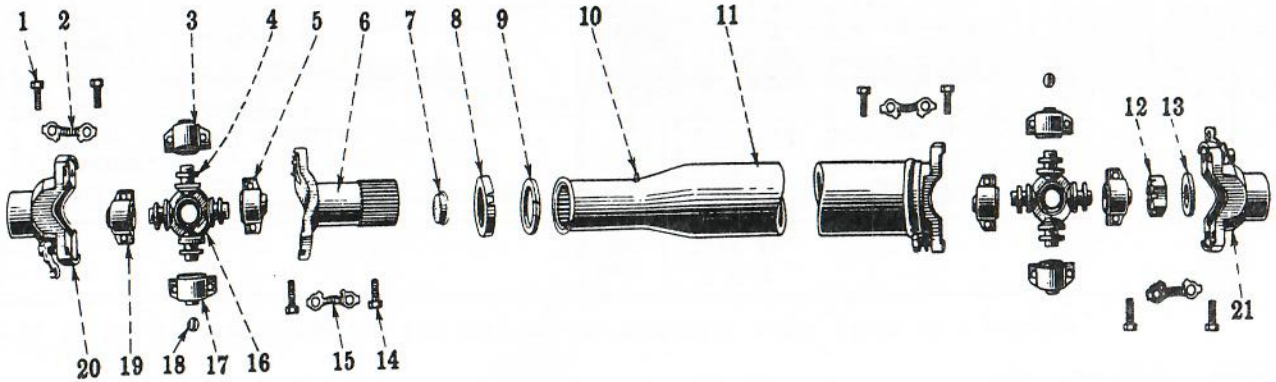

When ordering, always use IHC Part Nos.

Unnumbered parts in the illustrations are the same as corresponding parts shown with numbers.

Ref. No.	I H C Part No.	Ref. No.	I H C Part No.
1	38575 HA Capscrew.	12	13884 V Nut.
2	38562 H Plate.	13	------ Washer,29/32 x 1-5/8"
3	52719 HX Bearing.	14	38575 HA Capscrew.
4	38564 H Washer.	15	38562 H Plate.
5	52719 HX Bearing.	16	41249 HAX Cross.
6	81294 HX Yoke.	17	52718 HX Bearing.
7	69710 HA Plug.	18	20059 VA Plug.
8	81297 H Retainer.	19	52719 HX Bearing.
9	81298 H Washer.	20	41248 H Companion Flange.
10	81300 H Lubricator.	21	44199 H Companion Flange.
11	▲69714 HB Tube.		

▲ {63158 HC Shaft complete less flanges.
{69713 HB Shaft assembly less front joint.

John & Susan Hansen
For Personal Use ONLY

For Personal Use ONLY

FRONT AXLE AND TIE ROD
IHC Model F-10, D-2 Trucks - 61618 H (L.H.D.) and 61619 H (R.H.D.)
IHC Model F-100, D-15 Trucks - 62684 HA (L.H.D.) and 62685 HA (R.H.D.)

Unnumbered parts in the illustrations are the same as corresponding parts shown with numbers.

Ref. No.	I H C Part No.		Ref. No.	I H C Part No.	
1	1045 Y	Nut.	12	1044 Y	Bushing (D-2).
2	1043 YA	Washer.		43283 H	Bushing (D-15).
3	13823 V	Cone } 13840 V Roller Bearing	13	13343 VA	Bearing (D-2).
4	13824 V	Cup } complete.		51114 V	Bearing (D-15).
5	13822 V	Cup } 1166 Y Roller Bearing	14	61609 HX	Steering arm, right (R.H.D.).
6	1165 Y	Cone } complete.		61610 HX	Steering arm, left (L.H.D.).
7	61614 H	Grease guard.	15	1061 Y	Tie rod end.
8	61612 HX	Steering Knuckle (D-2)	16	1058 YX	Clamp.
	62686 HX	Steering Knuckle (D-15).	17	1059 Y	Tie rod.
9	1044 Y	Bushing (D-2).	18	13350 V	Plug.
	43283 H	Bushing (D-15).	19	1055 Y	Seat.
10	*1051 Y	King pin (D-2).	20	1057 YA	Spring.
	▲43282 H	King pin (D-15).	21	1056 Y	Plug.
11	66971 H	I-Beam (D-2).	22	61607 HX	Steering arm, left (R.H.D.).
	67153 HA	I-Beam (D-15).	23	61608 HX	Steering arm, right (L.H.D.).
				1060 Y	Tie rod end.

* - Overhaul Set Package No. is 84662 H. ▲ - Overhaul Set Package No. is 84663 H.

When ordering, always use I H C Part Nos.

John & Susan Hansen

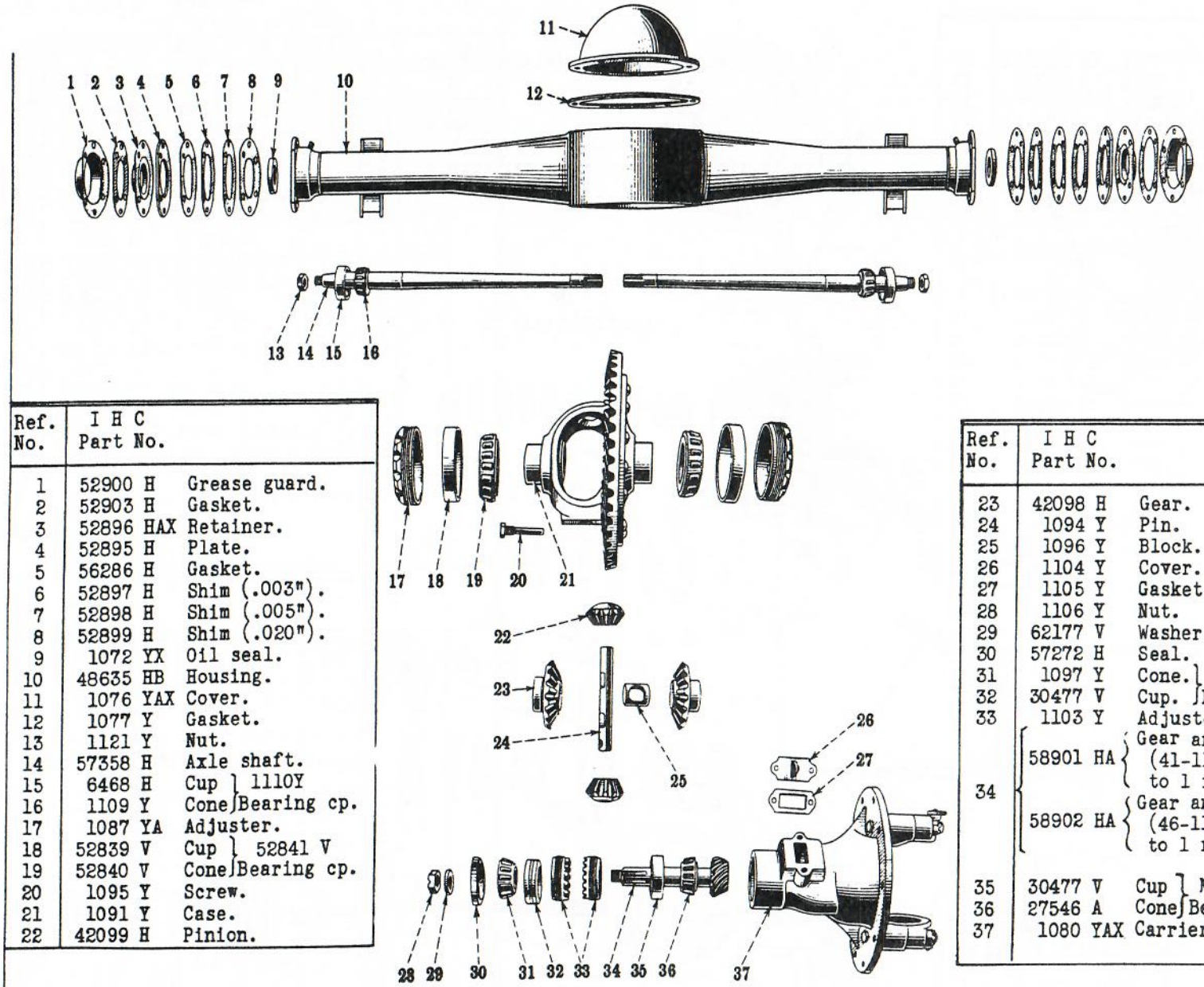

Ref. No.	I H C Part No.	
1	52900 H	Grease guard.
2	52903 H	Gasket.
3	52896 HAX	Retainer.
4	52895 H	Plate.
5	56286 H	Gasket.
6	52897 H	Shim (.003").
7	52898 H	Shim (.005").
8	52899 H	Shim (.020").
9	1072 YX	Oil seal.
10	48635 HB	Housing.
11	1076 YAX	Cover.
12	1077 Y	Gasket.
13	1121 Y	Nut.
14	57358 H	Axle shaft.
15	6468 H	Cup } 1110Y
16	1109 Y	Cone } Bearing cp.
17	1087 YA	Adjuster.
18	52839 V	Cup } 52841 V
19	52840 V	Cone } Bearing cp.
20	1095 Y	Screw.
21	1091 Y	Case.
22	42099 H	Pinion.

Ref. No.	I H C Part No.	
23	42098 H	Gear.
24	1094 Y	Pin.
25	1096 Y	Block.
26	1104 Y	Cover.
27	1105 Y	Gasket.
28	1106 Y	Nut.
29	62177 V	Washer.
30	57272 H	Seal.
31	1097 Y	Cone. } 1098 Y
32	30477 V	Cup. } Bearing Cp.
33	1103 Y	Adjuster.
34	58901 HA	Gear and pinion (41-11 teeth) (3.72 to 1 ratio).
	58902 HA	Gear and pinion (46-11 teeth) (4.18 to 1 ratio).
35	30477 V	Cup } M-22207
36	27546 A	Cone } Bearing cp.
37	1080 YAX	Carrier

Unnumbered parts in the illustrations are the same as corresponding parts shown with numbers.

When ordering, always use IHC Part Nos.

John & Susan Hansen
For Personal Use ONLY

REAR AXLE AND DIFFERENTIAL
(D-15 Trucks)
(IHC Model R-1100)
77456 H - 4.875 to 1 Ratio
77457 H - 5.286 to 1 Ratio

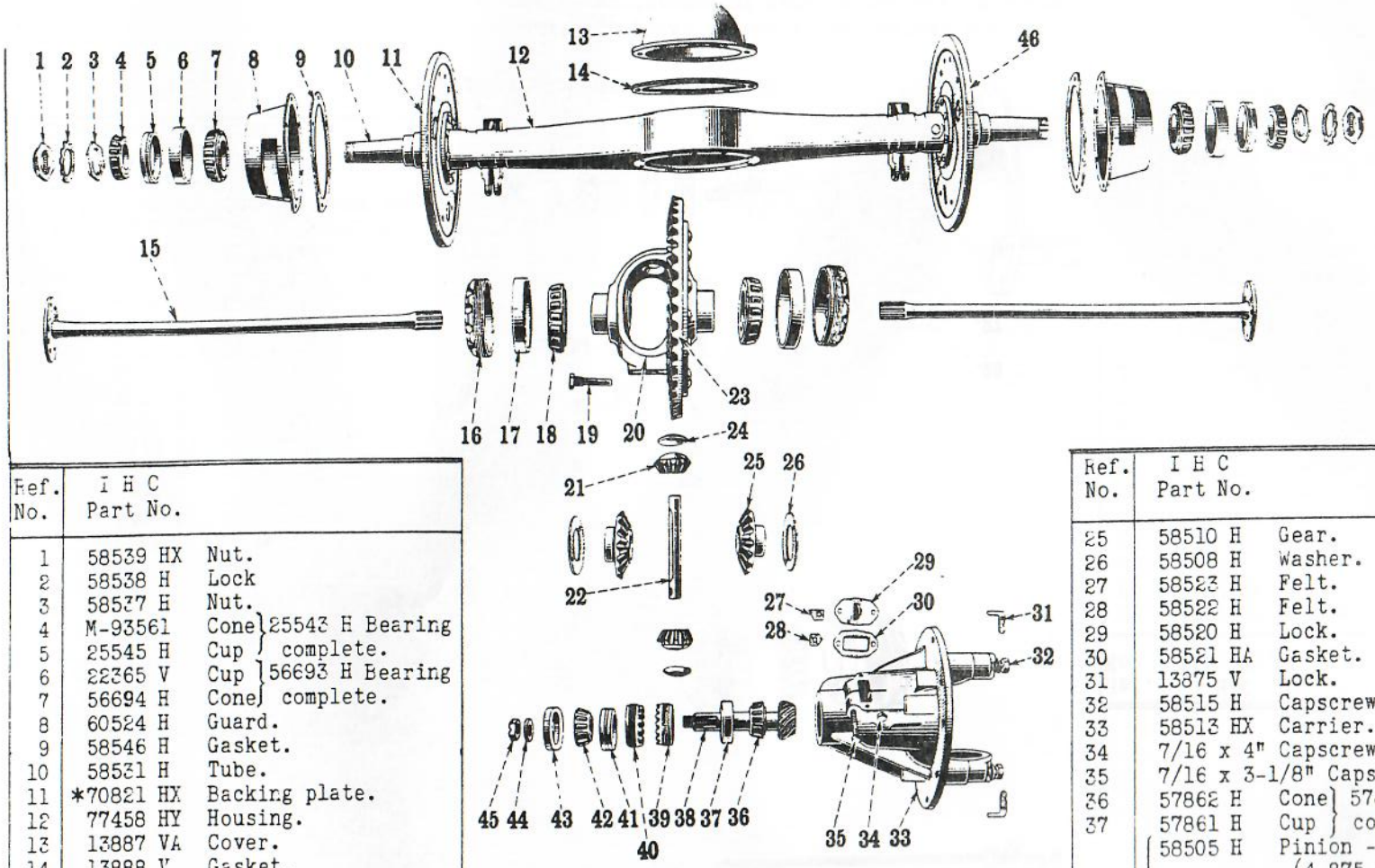

Ref. No.	I H C Part No.	
1	58539 HX	Nut.
2	58538 H	Lock
3	58537 H	Nut.
4	M-93561	Cone } 25543 H Bearing
5	25545 H	Cup } complete.
6	22365 V	Cup } 56693 H Bearing
7	56694 H	Cone } complete.
8	60524 H	Guard.
9	58546 H	Gasket.
10	58531 H	Tube.
11	*70821 HX	Backing plate.
12	77458 HY	Housing.
13	13887 VA	Cover.
14	13888 V	Gasket.
15	58533 H	Axle Shaft.
16	58517 H	Adjuster.
17	29008 H	Cup } 43353 H Bearing
18	43352 H	Cone } complete.
19	13871 V	Pin.
20	58507 HX	Case.
21	58511 H	Pinion.
22	58512 H	Pin.
23▲	58503 HA	Gear - 39 teeth (4.875 to 1 ratio)
	58504 HA	Gear - 37 teeth (5.286 to 1 ratio)
24	58509 H	Washer.

Ref. No.	I H C Part No.	
25	58510 H	Gear.
26	58508 H	Washer.
27	58523 H	Felt.
28	58522 H	Felt.
29	58520 H	Lock.
30	58521 HA	Gasket.
31	13875 V	Lock.
32	58515 H	Capscrew.
33	58513 HX	Carrier.
34	7/16 x 4"	Capscrew.
35	7/16 x 3-1/8"	Capscrew.
36	57862 H	Cone } 57860 H Bearing
37	57861 H	Cup } complete.
38▲	58505 H	Pinion - 8 teeth (4.875 to 1 ratio).
	58506 H	Pinion - 7 teeth (5.286 to 1 ratio).
39	58518 H	Adjuster.
40	58519 H	Adjuster.
41	30477 V	Cup } 54201 H Bearing
42	54203 H	Cone } complete
43	79634 H	Oil Seal
44	------	Washer, 29/32 x 1-5/8".
45	13884 V	Nut.
46	*70820 HX	Backing Plate.

Unnumbered parts in the illustrations are the same as corresponding parts shown with numbers.

When ordering, always use IHC Part Nos.

* - See Page 49.

▲ - Matched gear and pinion { 58948 HA - 4.875 to 1 ratio. 58949 HA - 5.286 to 1 ratio.

John & Susan Hansen

For Personal Use ONLY

For Personal Use ONLY

BRAKE CONTROL

When ordering, always use IHC Part Nos.

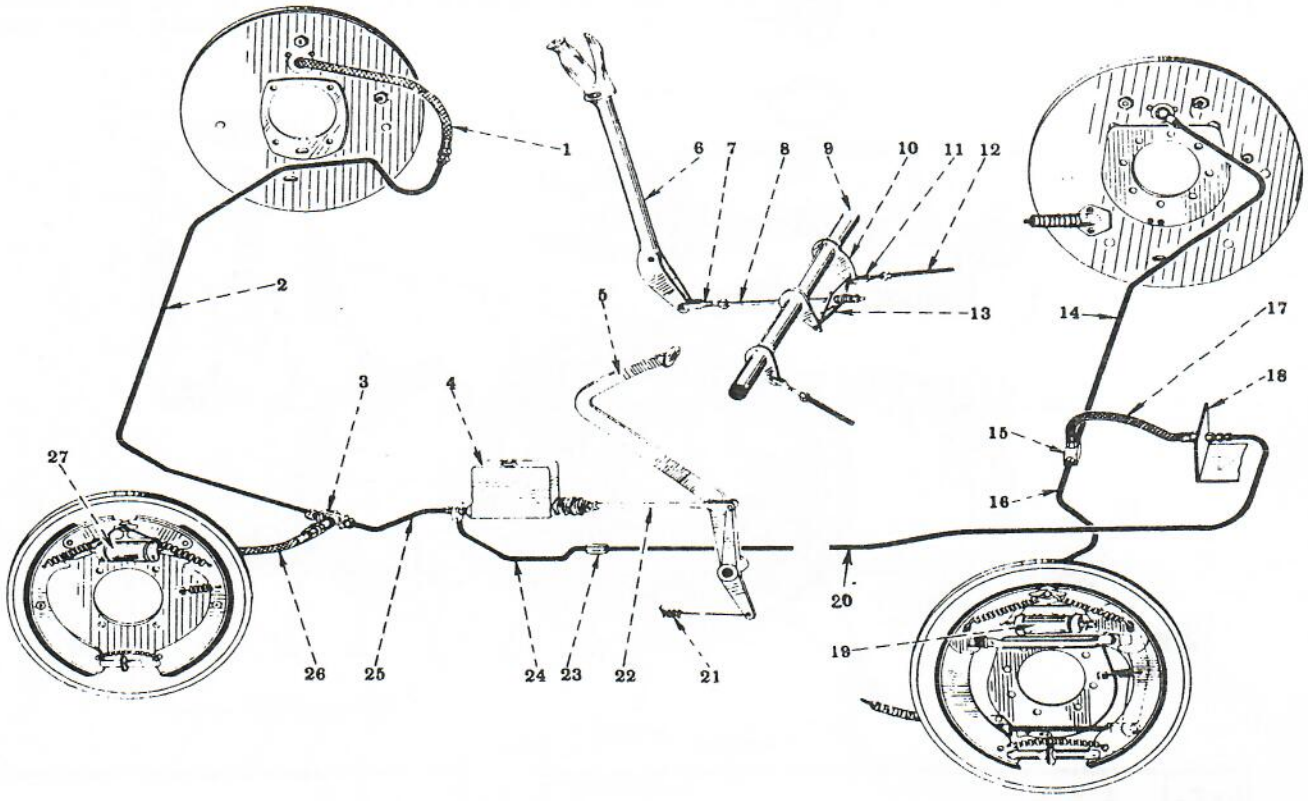

Ref. No.	IHC Part No.		Ref. No.	IHC Part No.	
1	48150 HA	Hose.	15	48156 H	Tee.
2	62592 H	Fluid pipe.	16	48636 H	Fluid pipe (D-2).
3	48181 H	Fitting.		60171 H	Fluid pipe (D-15).
4	48638 H	Hyd. master cylinder.	17	48150 HA	Hose.
5	81095 H	Pedal (L.H.D.)	18	62768 H	Bracket.
	81096 H	Pedal (R.H.D.)	19	64391 H	Wheel cylinder (D-2).
6	50580 HDX	Lever		49943 HX	Wheel cylinder (D-15).
7	19305 D	Yoke	20	62584 H	Fluid pipe (113" W.B.).
8	62625 HX	Rod (130" W.B.)		62585 H	Fluid pipe (125" W.B.).
	62512 HX	Rod (113" and 125" W.B.)		62586 H	Fluid pipe (130" W.B.).
9	63120 HX	Shaft.	21	43589 H	Return spring (L.H.D.)
10	59162 H	Lever.		62506 HB	Return spring (R.H.D.)
11	19305 D	Yoke.	22	81087 HX	Master cyl.rod (L.H.D.)
12	62513 H	Cable (D-2, 113" W.B.)		62556 HX	Master cyl.rod (R.H.D.)
	62514 H	Cable (D-2, 125" W.B.)	23	48090 H	Connector.
	69684 H	Cable (D-15,130" W.B.)	24	81093 H	Fluid pipe. (L.H.D.)
	73415 H	Cable (D-15,113" W.B.)		81094 H	Fluid pipe. (R.H.D.)
13	62510 H	Equalizer.	25	81083 H	Fluid pipe.
14	48639 H	Fluid pipe (D-2).	26	48150 HA	Hose.
	60172 H	Fluid pipe (D-15).	27	52201 HX	Wheel cylinder.

(See pages 57, 58, 59 for Brake Drums)

John & Susan Hansen

For Personal Use ONLY

HYDRAULIC BRAKE MASTER CYLINDER, 1-1/8" Diameter (48638 H)

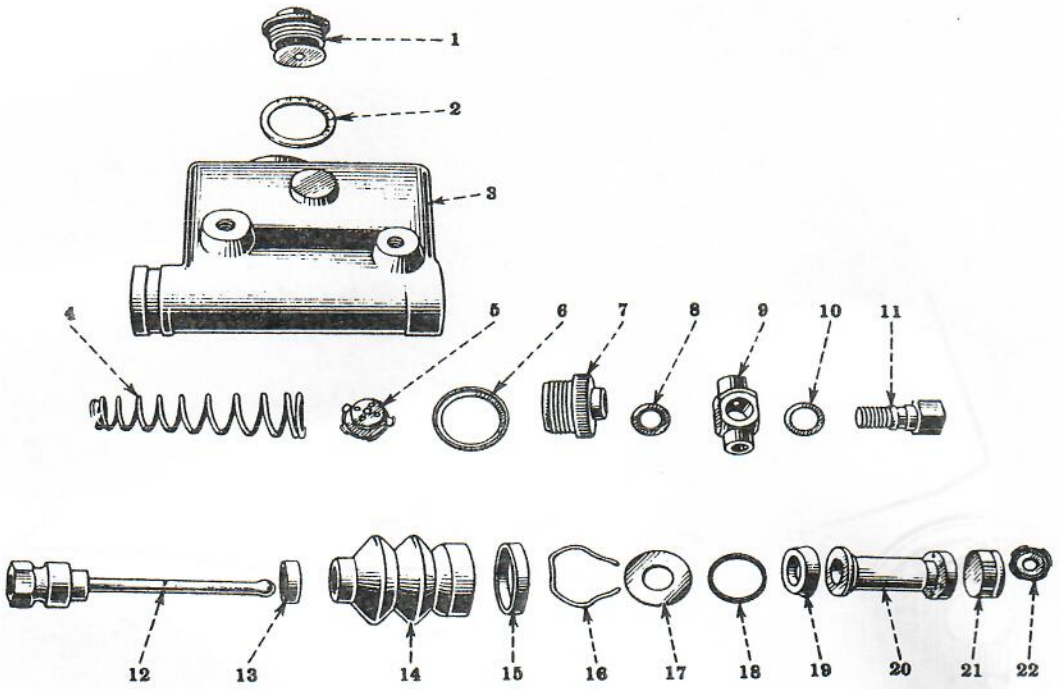

Ref. No.	I H C Part No.		Ref. No.	I H C Part No.	
1	52043 HX	Cap	12	52995 HAX	Rod.
2	52045 H	Gasket.	13	52048 H	Strap.
3	53452 HX	Body.	14	52997 H	Boot.
4	53393 HX	Spring.	15	51911 H	Strap.
5	53384 HY	Valve.	16	52999 H	Ring.
6	53385 H	Gasket.	17	53382 H	Washer.
7	53386 H	Head.	18	53391 H	Ring.
8	48167 H	Gasket.	19	53392 H	Cup.
9	68327 H	Fitting.	20	53389 HY	Piston.
10	48166 H	Gasket.	21	53383 H	Cup.
11	68326 H	Bolt.	22	53393 H	Retainer.

When ordering, always use IHC Part Nos.

John & Susan Hansen

For Personal Use ONLY

FRONT WHEEL BRAKES (D-2 and D-15 Trucks)

Unnumbered parts in the illustrations are the same as corresponding parts shown with numbers.

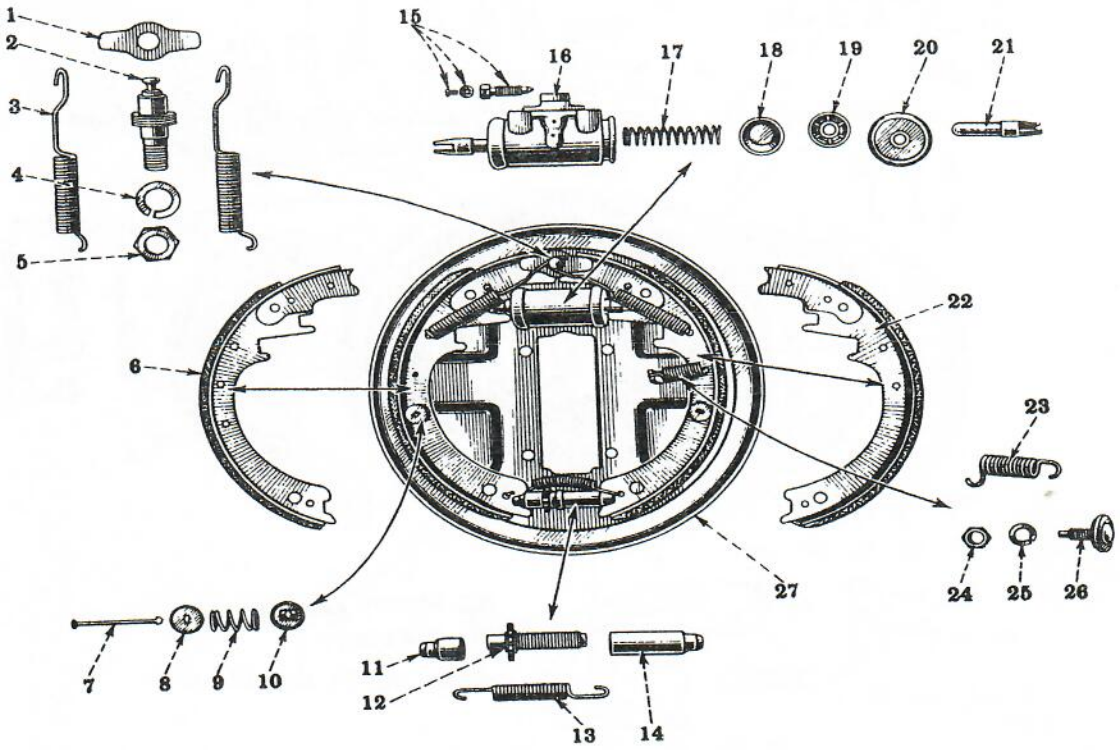

Ref. No.	I H C Part No.		Ref. No.	I H C Part No.	
1	66511 H	Guide plate.	14	59391 H	Adjusting screw nut.
2	66509 H	Anchor pin.	15	*48819 H	Bleeder screw.
3	51651 H	Shoe spring.	16	*53443 H	Cylinder body.
4	.....	Washer, 5/8" (heavy)	17	*59737 H	Spring.
5	49058 H	Anchor pin nut.	18	*51905 H	Cup.
6	▲59389 HAX	{Primary brake shoe with 1/4" th. lining.	19	*51902 H	Piston.
			20	*49661 H	Boot.
7	59397 H	Pin.	21	59394 H	Cyl. connecting link.
8	1033 Y	Shoe hold-down cup, lower.	22	▲59447 HA	{Secondary brake shoe with 1/4" th. lining.
9	80126 H	Shoe hold-down spring	23	66510 H	Sec. shoe return spring.
10	1032 Y	Shoe hold-down cup, upper.	24	49666 H	Nut.
			25	.....	Washer, 3/8".
11	59417 H	Adjusting screw socket.	26	1017 YX	Shoe eccentric.
12	59390 H	Adjusting screw.	27	61615 HX	Backing plate, right.
13	59396 H	Adjusting spring.		61616 HX	Backing plate, left.

▲ - Set of two brake shoes - 59447 HBX. * - Hydraulic brake parts.
(73265 H - Carton of brake springs, for two wheels).

(See pages 57 and 58 for Brake Drums)

John & Susan Hansen

For Personal Use ONLY

REAR WHEEL BRAKES (D-2 Trucks)

Unnumbered parts in the illustrations are the same as corresponding parts shown with numbers.

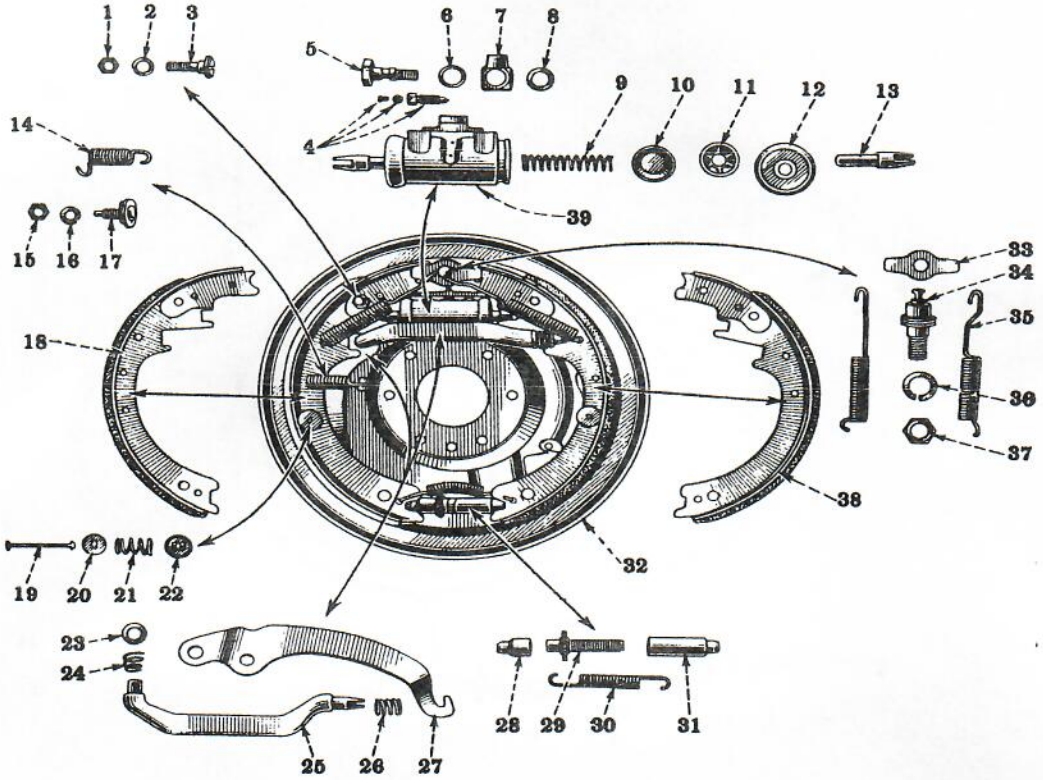

Ref. No.	I H C Part No.		Ref. No.	I H C Part No.	
1	.....	Nut, 3/8"-24 N.F.	22	1032 Y	Shoe hold-down cup, upper.
2	.....	Washer, 3/8".	23	59455 H	Washer.
3	69424 H	Hand brake lever bolt.	24	59449 H	Spring
4	*48819 H	Bleeder screw.	25	59453 H	Handbrake strut, left.
5	*48121 H	Inlet fitting screw.		59454 H	Handbrake strut, right.
6	*48122 H	Gasket.	26	59448 H	Spring.
7	*48168 H	Inlet fitting.	27	71148 H	Handbrake lever, left.
8	*48123 H	Gasket.		71149 H	Handbrake lever, right.
9	*59737 H	Spring.	28	59417 H	Adj. screw socket.
10	*51905 H	Cup.	29	59390 H	Adj. screw.
11	*51902 H	Piston.	30	59396 H	Adjusting spring.
12	*49661 H	Boot.	31	59391 H	Adj. screw nut.
13	49394 H	Cyl. connecting link.	32	66520 HX	Backing plate, left.
14	66510 H	Sec. shoe return spring.		66521 HX	Backing plate, right.
15	49666 H	Eccentric nut.	33	66511 H	Guide plate.
16	.....	Washer, 3/8".	34	66509 H	Anchor pin.
17	1017 YX	Shoe eccentric.	35	51651 H	Shoe spring.
18	▲59447 HA	Secondary brake shoe with 1/4" thick lining.	36	.....	Washer, 5/8" (heavy).
19	59397 H	Shoe hold-down pin.	37	49058 H	Anchor pin nut.
20	1033 Y	Shoe hold-down cup, lower.	38	▲59389 HAX	Primary brake shoe with 1/4" thick lining.
21	80126 H	Shoe hold-down spring.	39	*53443 H	Cylinder body.

* - Hydraulic brake parts.

▲- Set of two brake shoes - 59447 HBX

(See Pages 57 and 58 for Brake Drums) (73266 H - Carton of brake springs, for two wheels)

John & Susan Hansen

For Personal Use ONLY

REAR WHEEL BRAKES (D-15 Trucks)

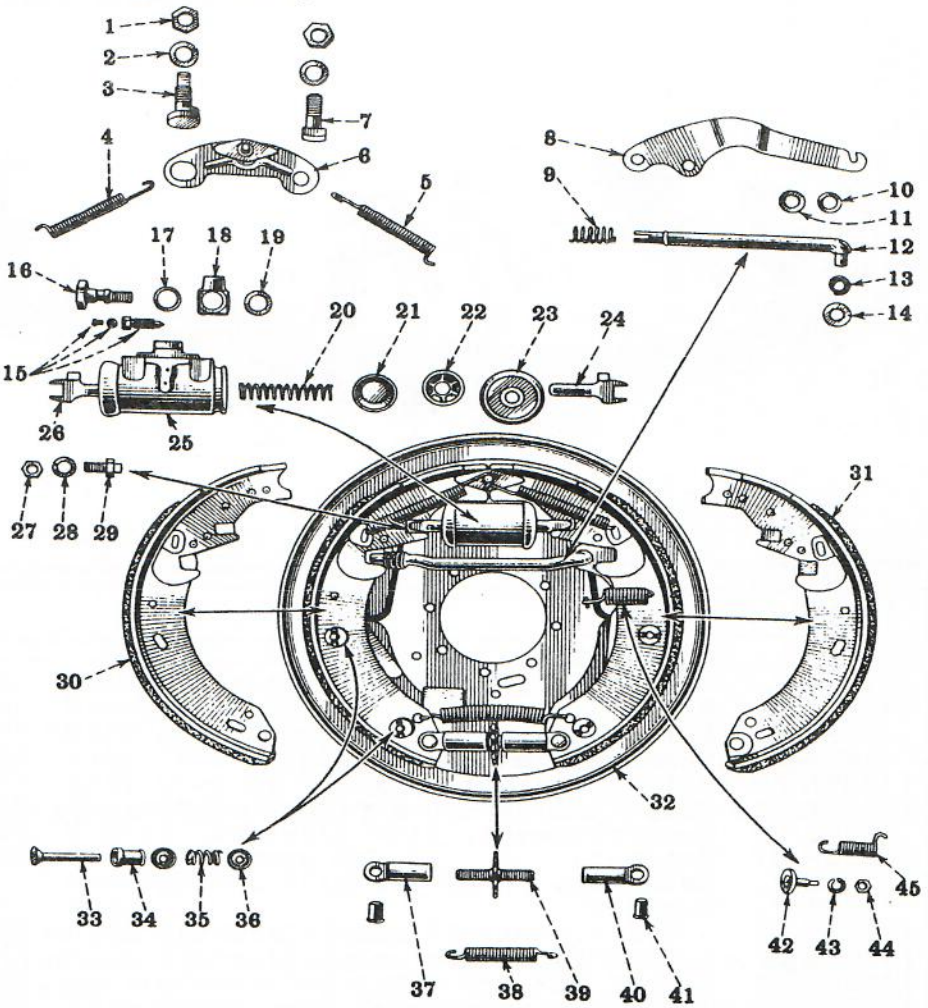

Ref. No.	I H C Part No.		Ref. No.	I H C Part No.	
1	49058 H	Nut.	26	69127 H	Cyl. connecting link.
2	.....	Lockwasher, 5/8".	27	.....	Nut, 1/2"
3	69117 H	Eccentric bolt (mounting)	28	.....	Lockwasher, 1/2".
4,5	69587 H	Shoe spring.	29	69111 H	Conn. link stop.
6	69109 HX	Anchor bracket.	30	▲74645 H	{Primary brake shoe with 1/4" thick lining.
7	69118 H	Plain bolt(mounting)	31	69129 HAX	Secondary brake shoe, left, with 1/4" thick lining.
8	{69121 H	Handbrake lever, left.		▲69130 HAX	Secondary brake shoe, right, with 1/4" thick lining.
	{69122 H	Handbrake lever, right.	32	{70820 HX	Backing plate, left.
9	69123 H	Spring.		{70821 HX	Backing plate, right.
10	69124 H	Washer.	33	69112 H	Shoe hold-down pin.
11	51160 V	Washer.	34	69116 H	Shoe hold-down spacer.
12	{69119 H	Handbrake strut, left.	35	75745 H	Shoe hold-down spring.
	{69120 H	Handbrake strut, right.	36	69114 H	Shoe hold-down cup.
13	60128 H	Spring.	37	49669 H	Adj. screw nut, left.
14	51160 V	Washer.	38	69125 H	Spring.
15	*48819 H	Bleeder screw.	39	49667 HX	Adjusting screw.
16	*48121 H	Inlet fitting screw.	40	49670 H	Adj. screw nut, right.
17	*48122 H	Gasket.	41	49064 H	Adj. screw pivot pin.
18	*48168 H	Inlet fitting.	42	1017 YX	Shoe eccentric.
19	*48123 H	Gasket.	43	.....	Lockwasher, 3/16".
20	*51908 H	Spring.	44	49666 H	Eccentric nut.
21	*51906 H	Cup.	45	69115 H	Sec. shoe return spring.
22	*51903 H	Piston.			
23	*51909 H	Boot.			
24	69127 H	Cyl. connecting link.			
25	*49943 HX	Cylinder body.			

▲ - Set of two brake shoes - left - 69131 HA * - Hydraulic brake parts.
▲ - Set of two brake shoes - right- 69132 HA
(See pages 57 and 58 for Brake Drums) (73272 HA - Carton of brake springs, for two wheels)

When ordering, always use IHC Part Nos.

John & Susan Hansen

For Personal Use ONLY

FRONT SPRINGS (D-2 Trucks)

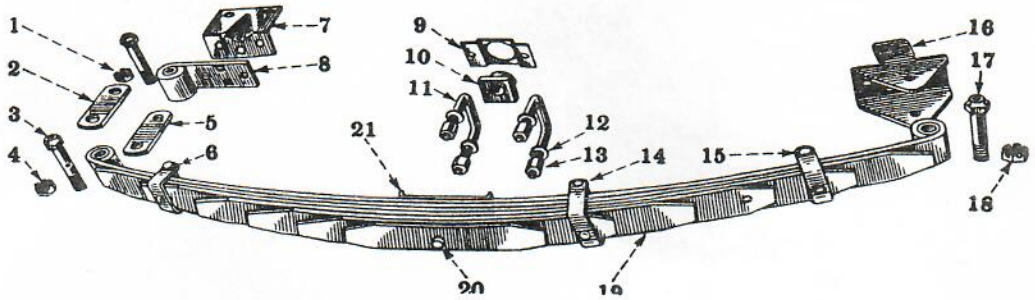

Ref. No.	I H C Part No.	
1	------	Nut, 9/16".
2	41606 H	Shackle, outer.
3	41604 H	Pin.
4	------	Nut, 7/16".
5	41605 H	Shackle, inner.
6	41353 HX	Clip (Domestic only).
	83805 HX	Clip (pin type)(on fifth leaf)(Export only).
7	62773 HA	Reinforcement.
8	62769 HX	Bracket.
9	1222 Y	Retainer.
10	1223 Y	Bumper.
11	2093 YX	U-Bolt (Domestic only) (not for 20" wheels).
	75074 HX	U-Bolt (Domestic only) (for 20" wheels).
	43355 HX	U-Bolt (Export only) (not for 20" wheels).
	79203 HX	U-Bolt (Export only) (for 20" wheels).
12	------	Lockwasher, 7/16".
13	2094 Y	Nut.
14	64317 HX	Clip (Domestic only).
	64319 HX	Clip (bolt type)(on eighth leaf)(Export only).
15	41353 HX	Clip (Domestic only).
	83805 HX	Clip (pin type)(on fifth leaf)(Export only).
16	62776 HA	Bracket.
17	41604 H	Pin.
18	------	Nut, 9/16".
19	61689 H	Spring (7 leaves) (Domestic only).
	82588 H	Spring (9 leaves) (Export only)(pair - 84648 H)
20	52482 V	Center bolt (Domestic only).
	51273 V	Center bolt (Export only).
21	2958 Y	Plate.
..	47104 H	Clip spacer (Export only).
..	84618 H	Pin for 83805 HX (Export only).
..	84732 H	Tension plate (Export only).

John & Susan Hansen

For Personal Use ONLY

REAR SPRINGS (D-2 Trucks)

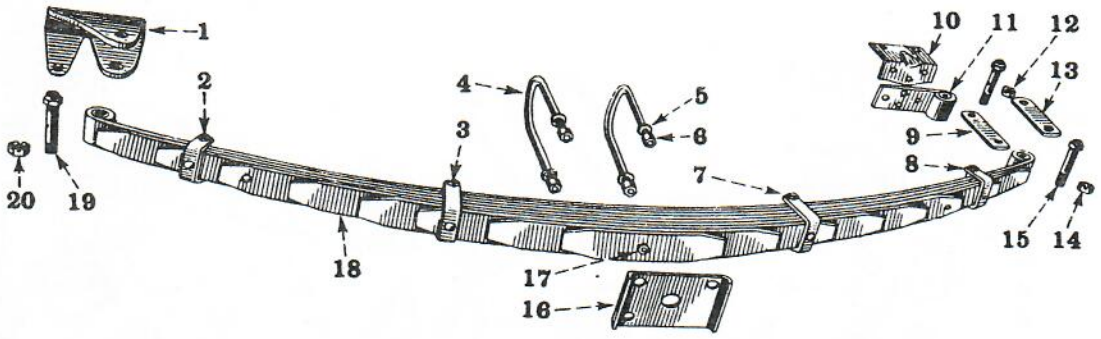

Ref. No.	I H C Part No.	
1	41573 H	Bracket, right.
	41574 H	Bracket, left.
2	46801 HX	Clip (Domestic only).
	84562 HX	Clip (bolt type) on fourth leaf (Export only).
3	41351 HX	Clip (Domestic only).
	84587 HX	Clip (bolt type) on ninth leaf (Export only.
4	61688 HX	U-Bolt (Domestic only).
	82714 HX	U-Bolt (Export only).
5	------	Lockwasher, 7/16".
6	2094 Y	Nut.
7	41351 HX	Clip (Domestic only).
	84587 HX	Clip (bolt type) on ninth leaf (Export only).
8	46801 HX	Clip (Domestic only).
	84562 HX	Clip (bolt type) on fourth leaf (Export only).
9	41608 H	Shackle, inner.
10	62773 HA	Reinforcement.
11	62769 HX	Bracket.
12	------	Nut, 9/16".
13	41607 H	Shackle, outer.
14	------	Nut, 9/16".
15	41604 H	Pin.
16	2103 Y	Plate.
17	51273 V	Center bolt (Domestic only).
	54321 H	Center bolt (Export only).
18	61690 H	Spring (9 leaves) (Domestic only).
	82711 H	Spring (12 leaves) (Export only)(pair - 84649 H)
19	41603 H	Pin.
20	------	Nut, 9/16".

John & Susan Hansen

For Personal Use ONLY

FRONT SPRINGS (D-15 Trucks)

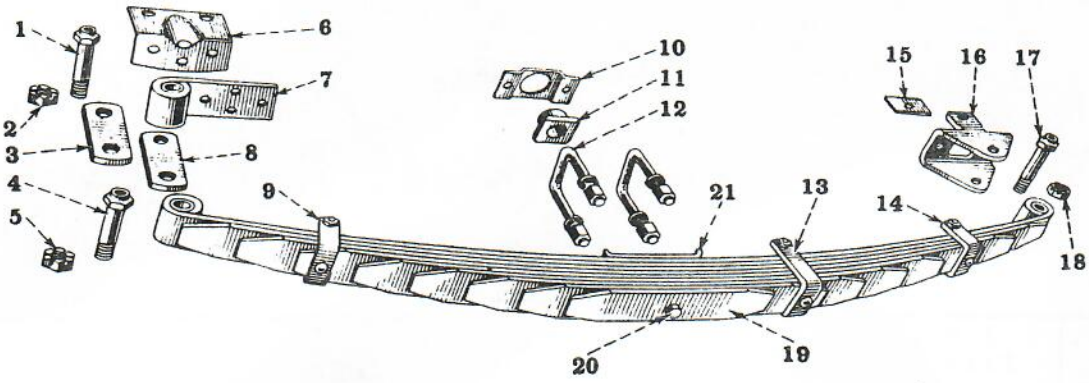

Ref. No.	I H C Part No.	
1	41604 H	Pin.
2	------	Nut, 9/16".
3	41606 H	Shackle, outer.
4	41604 H	Pin.
5	------	Nut, 9/16".
6	62773 HA	Reinforcement.
7	62769 HX	Bracket.
8	41605 H	Shackle, inner.
9	64318 HX	Clip (Domestic only).
	84614 HX	Clip (pin type) on fifth leaf (Export only).
10	1222 Y	Retainer
11	1223 Y	Bumper.
12	43355 HX	U-Bolt (Domestic only) (not for 20" wheels).
	79203 HX	U-Bolt (Domestic only) (for 20" wheels).
	82715 HX	U-Bolt (Export only) (not for 20" wheels).
	84661 HX	U-Bolt (Export only) (for 20" wheels).
13	64319 HX	Clip (Domestic only).
	84613 HX	Clip (bolt type) on ninth leaf (Export only).
14	64318 HX	Clip (Domestic only).
	84614 HX	Clip (pin type) on fifth leaf (Export only).
15	66103 H	Reinforcement.
16	62776 HA	Bracket.
17	41604 H	Pin.
18	------	Nut, 9/16".
19	63270 H	Spring (9 leaves) (Domestic only).
	82713 H	Spring (11 leaves) (Export only) (pair - 84650 H).
20	13016 V	Center bolt (Domestic only).
	69885 H	Center bolt (Export only).
21	2958 Y	Plate.
..	47104 H	Clip spacer (Export only).
..	84618 H	Pin for 84614 HX (Export only).
..	84732 H	Tension plate (Export only).

John & Susan Hansen

For Personal Use ONLY

REAR SPRINGS (D-15 Trucks)

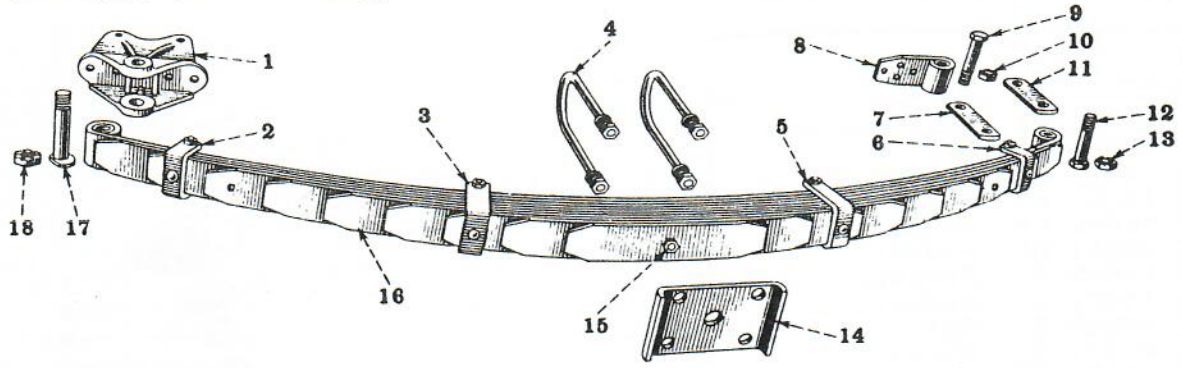

Ref. No.	I H C Part No.	
1	63264 H	Bracket.
2	43464 HX	Clip (Domestic only) (not for 20" wheels).
	84612 HX	Clip (Export only) (not for 20" wheels).
	7848 HX	Clip (for 20" wheels).
3	8488 HX	Clip (Domestic only) (not for 20" wheels).
	84611 HX	Clip (bolt type)on tenth leaf (Export only)(not for 20" wheels)
	62905 VX	Clip (for 20" wheels).
4	77338 HX	U-Bolt (Domestic - also Export with 20" wheels).
	82716 HX	U-Bolt (Export - except with 20" wheels).
5	8488 HX	Clip (Domestic only) (not for 20" wheels).
	84611 HX	Clip(bolt type)on tenth leaf(Export only)(not for 20" wheels)
	62905 VX	Clip (for 20" wheels).
6	43464 HX	Clip (Domestic only) (not for 20" wheels).
	84612 HX	Clip(bolt type)on fourth leaf(Export only)(not for 20" wheels).
	7848 HX	Clip (for 20" wheels).
7	43359 H	Shackle, inner.
8	63172 HX	Bracket.
9	43360 H	Pin.
10	------	Nut, 3/4".
11	43358 H	Shackle, outer.
12	43360 H	Pin.
13	------	Nut, 3/4".
14	77339 H	Plate.
15	10519 V	Center bolt (Domestic only)(not for 20" wheels).
	51269 V	Center bolt (Export only)(not for 20" wheels).
	10521 V	Center bolt (for 20" wheels)
16	63269 H	Spring (10 leaves) (Domestic only) (not for 20" wheels).
	82712 H	Spring (13 leaves) (Export only) (not for 20" wheels).
	76241 H	Spring (8 leaves) (for 20" wheels).
17	43357 H	Pin.
18	------	Nut, 3/4".

SHOCK ABSORBERS

I H C Part No.	
26120 H	Shock absorber spacer.
44455 H	Rear shock absorber eye - bolt spacer (D-15).
*50679 H	Rear shock absorber, right (1054542).
*50680 H	Rear shock absorber, left (1054543).
*50681 H	Front shock absorber link with eye-bolt (1063607) (not for trucks with front spring riser blocks).
50683 H	Rear shock absorber eye-bolt spacer (D-2).
*61691 H	Rear shock absorber with eye-bolt (5312072).
*61994 H	Front shock absorber, right (5307290).
*61995 H	Front shock absorber, left (5307291).
*79154 H	Front shock absorber link with eye-bolt (5328919) (for trucks with front spring riser blocks).

* - *Service can also be obtained at an Authorized United Motors Service Branch.*

John & Susan Hansen

For Personal Use ONLY

STEERING GEAR (IHC MODEL RS-14)
61907 HA - L.H. Drive Trucks
61908 HA - R.H. Drive Trucks

Ref. No.	I H C Part No.	
1	68024 HA	Horn button.
2	68025 H	Cup.
3	54679 H	Spring.
4	54681 HA	Cap.
5	54686 HB	Cable.
6	68051 HX	Plate.
7	54683 H	Spring.
8	54677 H	Washer.
9	56949 H	Nut.
10	65177 H	Wheel.
11	46464 H	Bushing.
12	73587 H	Tube (L.H.D.)
	73588 H	Tube (R.H.D.)
13	73590 HX	Tube.
14	68012 HX	Clamp.
15	50448 H	Ring.
16, 17	68041 H	Ball bearing race
18	50448 H	Ring.
19	68010 H	Cover.
20	68020 H	Shim (.003").
21	68021 H	Shim (.010").
22	68022 H	Shim (.030").
23	68017 H	Washer.
24	68018 H	Washer.
25	68008 HA	Arm.
26	------	Washer, 3/4"
27	68014 H	Nut.
28	68004 HX	Cover.
29	68016 H	Nut.
30	50443 H	Screw.
31	68015 HX	Cover.
32	68023 H	Gasket.
33	68013 HX	Shaft.
34	68002 H	Bushing, inner.
	68003 H	Bushing, outer.
35	68000 HX	Case (L.H.D.).
	68001 HX	Case (R.H.D.).

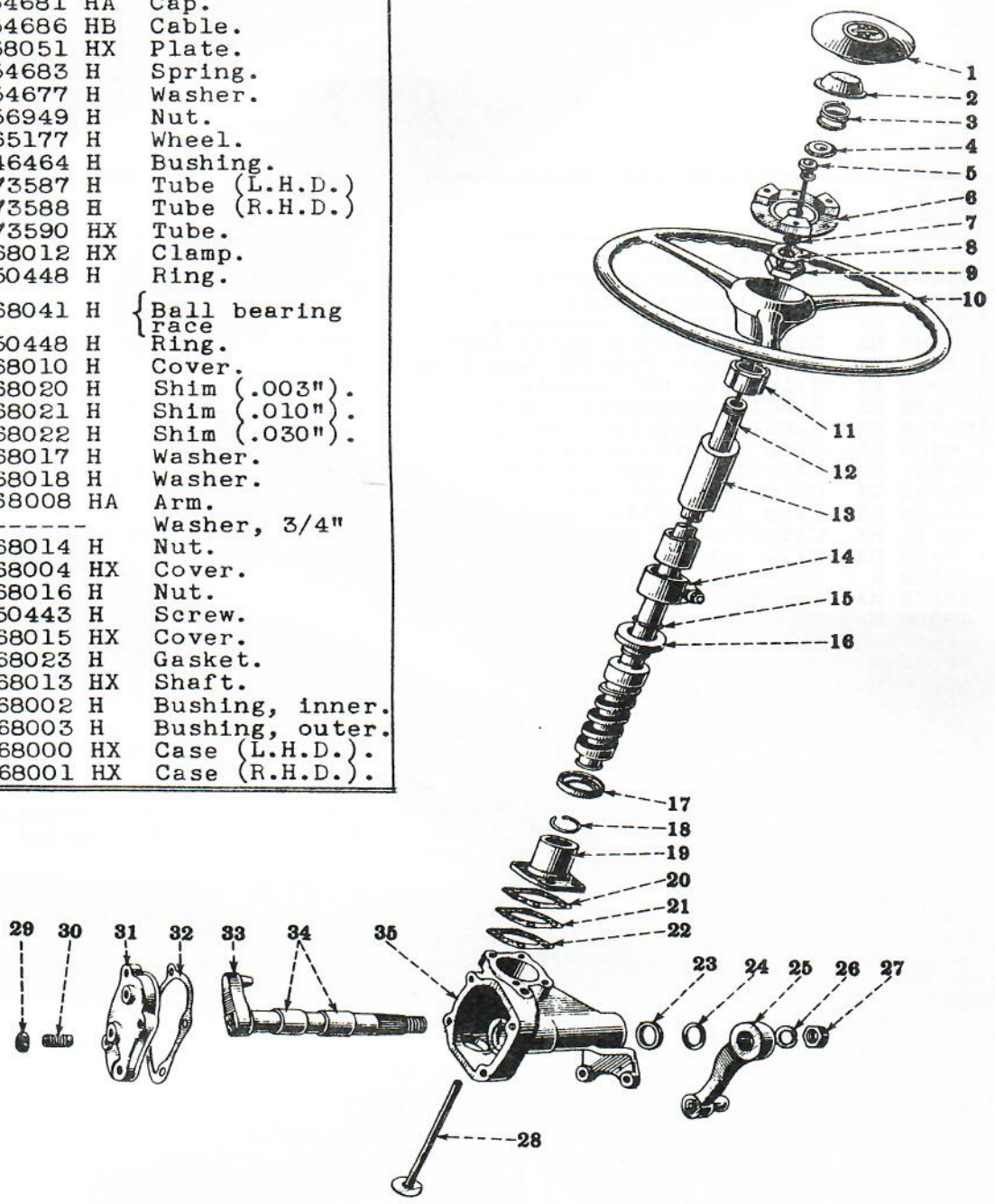

John & Susan Hansen

For Personal Use ONLY

STEERING DRAG LINK

Ref. No.	I H C Part No.	
1	1336 YA	Plug.
2	1335 Y	Seat.
3	1057 YA	Spring.
4	1333 Y	Seat.
5	61905 HX	Drag link (L.H.D.).
	61906 HX	Drag link (R.H.D.).
6	Q 3615	Lubricator
7	1337 Y	Seat.
8	13350 V	Plug.

Unnumbered parts in the illustrations are the same as corresponding parts shown with numbers.

John & Susan Hansen

For Personal Use ONLY

FRONT BUMPER (6279 I HA)

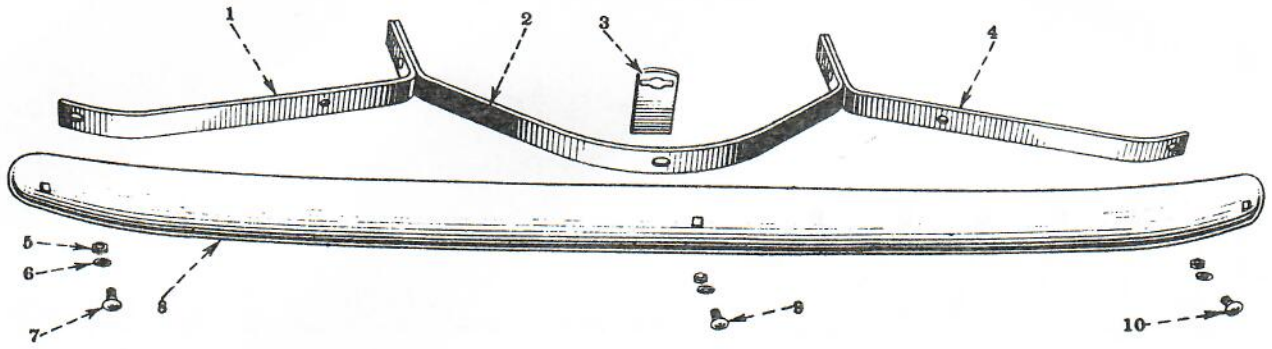

Ref. No.	I H C Part No.	
1	75925 H	Bar.
2	68516 HA	Bar.
3	68513 HA	Starting crank bracket.
4	75926 H	Bar.
5	44673 H	Nut.
6	18942 D	Lockwasher.
7	50627 H	Bolt.
8	75928 H	Bar.
9	68512 H	Bolt.
10	50627 H	Bolt.

Unnumbered parts in the illustrations are the same as corresponding parts shown with numbers

John & Susan Hansen

For Personal Use ONLY

I H C Part No.	Description
	WHEELS, BRAKE DRUMS, HUBS, HUB CAPS (For D-2 Trucks only)
69947 H	Front and rear wheel assembly, less hub and brake drum (pressed steel type - prime coated spokes and rim) (for 7.00 x 15 tires).
69948 H	Front and rear wheel assembly, less hub and brake drum (pressed steel type - prime coated spokes and rim) (for 7.50 x 15 tires).
75034 H	Front and rear wheel assembly, less hub and brake drum (pressed steel type - prime coated spoke and rim) (for 5.50 and 6.00 x 20 tires).
78143 H	Front and rear disc wheel and rim (for 6.00 x 16 and 6.50 x 16 tires).
27569 H	Balance weight (5.34 oz.). }
42038 H	Balance weight (.84 oz.) }
42039 H	Balance weight (1.84 oz.) }
42040 H	Balance weight (2.84 oz.) } (for 7.00 x 15 and 7.50 x 15 tires).
42041 H	Balance weight (3.84 oz.) }
42049 H	Balance weight nut (.16 oz.) }
69949 HA	Front wheel hub with brake drum, right.
69950 HA	Front wheel hub with brake drum, left.
69951 H	Front wheel hub.
69952 HA	Rear wheel hub with brake drum, right.
69953 HA	Rear wheel hub with brake drum, left.
69954 H	Rear wheel hub.
56679 HA	Front and rear brake drum.
69955 H	Front and rear wheel bolt, right.
69956 H	Front and rear bolt, left.
69957 H	Front and rear wheel bolt nut, right.
69958 H	Front and rear wheel bolt nut, left.
54382 HA	Front and rear wheel hub cap.
56865 H	Front and rear wheel hub cap retaining clip.
52900 H	Rear brake drum grease guard.
52903 H	Rear brake drum grease guard gasket.
58636 H	Front wheel hub grease cap.
61614 H	Front brake drum grease guard.
2070 Y	Rear wheel hub oil slinger.
2071 Y	Front wheel grease retainer assembly.

John & Susan Hansen

For Personal Use ONLY

I H C Part No.	Description
	WHEELS, BRAKE DRUMS, HUBS, HUB CAPS
	(For D-15 Trucks only)
58281 HAX	Front and rear disc wheel with rim and side ring (for 6.00 x 16 and 6.50 x 16 single tires). Rear outer disc wheel with rim and side ring (for 6.00 x 16 and 6.50 x 16 dual tires).
58284 HCX	Front and rear disc wheel with rim and side ring (for 7.00 x 16 and 7.50 x 16 single tires).
67311 HAX	Rear inner disc wheel with rim and side ring (for 6.00 x 16 and 6.50 x 16 dual tires).
79860 HAX	Front and rear disc wheel with rim and side ring (for 6.00 x 20 dual tires).
79876 HAX	Front and rear disc wheel with rim and side ring (for 6.00 x 20 and 6.50 x 20 single tires).
79877 HAX	Front and rear disc wheel with rim and side ring (for 7.00 x 20 single tires).
79878 HAX	Rear disc wheel with rim and side ring (for 34 x 7, 7.50 x 20 and 8.25 x 20 single tires).
37645 HA	Rim side ring (for 79878 HAX).
37695 HA	Rim side ring (for 79877 HAX).
43263 HA	Rim side ring (for 79860 HAX and 79876 HAX).
58282 H	Rim side ring (for 58281 HAX and 67311 HAX).
58285 H	Rim side ring (for 58284 HCX).
81544 H	Front wheel hub and brake drum assembly, right.
81545 H	Front wheel hub and brake drum assembly, left.
81546 HX	Rear wheel hub and brake drum assembly, right (for all single tires except 34 x 7, 7.50 x 20 and 8.25 x 20).
81547 HX	Rear wheel hub and brake drum assembly, left (for all single tires except 34 x 7, 7.50 x 20 and 8.25 x 20).
81552 HX	Rear wheel hub and brake drum assembly, right (for dual tires and 34 x 7, 7.50 x 20 and 8.25 x 20 single tires).
81553 HX	Rear wheel hub and brake drum assembly, left (for dual tires and 34 x 7, 7.50 x 20 and 8.25 x 20 single tires).

John & Susan Hansen

For Personal Use ONLY

I H C Part No.	Description
	WHEELS, BRAKE DRUMS, HUBS, HUB CAPS
	(For D-15 Trucks only)- Continued
81362 H	Front and rear wheel bolt, right (not rear wheel with dual tires or 34 x 7, 7.50 x 20 and 8.25 x 20 single tires).
81363 H	Front and rear wheel bolt, left (not rear wheel with dual tires or 34 x 7, 7.50 x 20 and 8.25 x 20 single tires).
81368 H	Rear wheel bolt, right (for dual tires and 34 x 7, 7.50 x 20 and 8.25 x 20 single tires).
81369 H	Rear wheel bolt, left (for dual tires and 34 x 7, 7.50 x 20 and 8.25 x 20 single tires).
81364 H	Front and rear wheel bolt nut, right (not for 34 x 7, 7.50 x 20 and 8.25 x 20 single rear tires).
81365 H	Front and rear wheel bolt nut, left (not for 34 x 7, 7.50 x 20 8.25 x 20 single rear tires).
81366 H	Rear wheel bolt nut, right (for 34 x 7, 7.50 x 20 and 8.25 x 20 single tires).
81367 H	Rear wheel bolt nut, left (for 34 x 7, 7.50 x 20 and 8.25 x 20 single tires).
71890 H	Front and rear wheel hub cap (for all single tires except 34 x 7, 7.50 x 20 and 8.25 x 20).
71892 H	Rear wheel hub cap (for dual tires and 34 x 7, 7.50 x 20 and 8.25 x 20 single tires).
29413 HA	Brake drum inspection hole cover.
60383 H	Inner tire valve extension (for 6.00 x 16 and 6.50 x 16 dual tires).
67277 H	Inner tire valve extension clip (for 6.00 x 16 and 6.50 x 16 dual tires).
58546 H	Rear brake drum grease guard gasket.
58636 H	Front wheel hub grease cap.
60524 H	Rear brake drum grease guard.
61614 H	Front brake drum grease guard.
2071 Y	Front wheel grease retainer assembly.

John & Susan Hansen

For Personal Use ONLY

I H C Part No.	Description
	FRONT FENDERS
29584 H	Front fender to body seal rivet.
63894 HBY	Front fender rear side panel assembly, right (Left Hand Drive).
63895 HBY	Front fender rear side panel assembly, left (Left Hand Drive).
63896 HBY	Front fender rear side panel assembly, right (Right Hand Drive).
63897 HBY	Front fender rear side panel assembly, left (Right Hand Drive).
65746 HA	Front fender to running board spacer.
65757 HA	Front fender assembly, right (includes front side panel) (Domestic only) (not for 20" wheels).
65758 HA	Front fender assembly, left (includes front side panel) (Domestic only) (not for 20" wheels).
65929 HA	Front fender side panel anti-squeak, 9" long.
65935 HA	Front fender side panel anti-squeak, 2" long.
65937 H	Front fender to body seal.
65945 H	Front fender support assembly, right (not for 20" wheels).
65946 H	Front fender support assembly, left (not for 20" wheels).
66871 HA	Front fender side panel anti-squeak, 16½" long.
67446 HA	Front fender front support bracket, right.
67447 HA	Front fender front support bracket, left.
67464 H	Front fender rear side panel lower bracket.
67479 H	Front fender support to radiator spacer.
67929 H	Front fender skirt brace, right (Export only) (not for 20" wheels).
67930 H	Front fender skirt brace, left (Export only) (not for 20" wheels).
67931 HX	Front fender assembly, right (does not include front side panel or skirt brace) (Export only) (not for 20" wheels).
67932 HX	Front fender assembly, left (does not include front side panel or skirt brace (Export only) (not for 20" wheels).
67933 H	Front fender front side panel, right (Export only).
67934 H	Front fender front side panel, left (Export only).
72335 H	Front side panel to front fender mounting bolt (Export only). Front fender skirt brace to front fender mounting bolt (Export only).
72688 H	Front fender assembly, right (includes front side panel) (Domestic only) (for 20" wheels).
72689 H	Front fender assembly, left (includes front side panel) (Domestic only) (for 20" wheels).
72692 H	Front fender support assembly, right (for 20" wheels).
72693 H	Front fender support assembly, left (for 20" wheels).
72783 HX	Front fender assembly, right (does not include front side panel or skirt brace) (Export only) (for 20" wheels).
72784 HX	Front fender assembly, left (does not include front side panel or skirt brace) (Export only) (for 20" wheels).
72789 H	Front fender skirt brace, right (Export only) (for 20" wheels).
72790 H	Front fender skirt brace, left (Export only) (for 20" wheels).
	REAR FENDERS **(not for trucks equipped with panel or pick-up bodies)**
67909 HX	Rear fender assembly, right (for single tires) (Domestic only) (not for 20" wheels).
67910 HX	Rear fender assembly, left (for single tires) (Domestic only) (not for 20" wheels).
72343 H	Rear fender assembly, right (for dual tires).
72344 H	Rear fender assembly, left (for dual tires).
72633 H	Rear fender skirt support (for single tires) (Export only).
72634 HX	Rear fender assembly, right (for single tires) (not for 20" wheels) (Export only).
72635 HX	Rear fender assembly, left (for single tires) (not for 20" wheels) (Export only).
72787 HX	Rear fender assembly, right (for 20" wheels).
72788 HX	Rear fender assembly, left (for 20" wheels).

John & Susan Hansen

For Personal Use ONLY

I H C Part No.	Description
	HOOD
64615 HAX	Hood top panel with hinge, right.
64616 HAX	Hood top panel with hinge, left.
64617 HY	Hood side panel with hood catch, right.
64618 HY	Hood side panel with hood catch, left.
64625 H	Hood top panel hinge assembly.
65728 H	Hood catch assembly, right.
65729 H	Hood catch assembly, left.
65788 H	Hood lacing (at radiator).
65918 HA	Hood, complete.
65934 H	Hood lacing (at cowl).
	FLOOR BOARDS, TOE BOARDS, MATS
64667 HX	Floorboard with side seal (not for trucks with panel bodies nor with 4-speed transmissions).
65657 HA	Floor mat (Left Hand Drive) (not for trucks with 4-speed transmissions).
65658 HB	Floor mat (Right Hand Drive) (not for trucks with 4-speed transmissions).
67508 HBX	Toeboard with footrest, mounting pad and seals (Left Hand Drive).
67509 HAX	Toeboard with foot rest, mounting pad and seals (Right Hand Drive).
	RUNNING BOARDS
29583 H	Running board welt rivet.
64687 HX	Running board assembly, right (for trucks with cab only).
64688 HX	Running board assembly, left (for trucks with cab only).
65763 H	Running board welt.
65766 HX	Running board assembly, right (for trucks with panel body and wihtout cab or body).
65767 HX	Running board assembly, left (for trucks with panel body and without cab or body).
66108 H	Running board support, front.
66109 H	Running board support, rear.

John & Susan Hansen

For Personal Use ONLY

I H C Part No.	Description
	CAB AND COWL (Model "HE") (Machine Attachment)
50003 H	Rear view mirror (non-glare).
62788 H	Cab front mounting bracket.
	Cab rear mounting bracket (113" W.B. trucks).
63778 HAX	Cowl ventilator cover with deflector and hinge.
63801 H	Door lock striker plate.
63815 H	Rear window glass (safety).
63817 H	Rear window glass channel (for safety glass).
64684 H	Cab rear mounting bolt.
64706 HX	Door glass regulator channel assembly (less 64713 H weather seal).
64708 H	Door glass (safety).
64752 HA	Door glass regulator handle.
64753 HA	Door lock inside handle.
64754 HA	Door outside handle (locking type)(does not include 65660 H lock cylinder).
64755 HA	Door outside handle (non-locking type).
64756 H	Door glass bumper pad.
64758 H	Door glass channel assembly.
64759 HA	Door glass regulator, right.
64760 HA	Door glass regulator, left.
64761 H	Door lock and remote control assembly, right.
64762 H	Door lock and remote control assembly, left.
64765 H	Door upper hinge assembly, right (Left Hand Drive).
64766 H	Door upper hinge assembly, left (Right Hand Drive).
64767 H	Door lower hinge assembly, right.
64768 H	Door lower hinge assembly, left.
64772 H	Cab rear mounting pad.
64795 H	Rear view mirror bracket (Right Hand Drive).
64796 H	Rear view mirror bracket (Left Hand Drive).
65305 H	Door upper hinge assembly, right (Right Hand Drive).
65306 H	Door upper hinge assembly, left (Left Hand Drive).
65660 H	Door outside handle lock cylinder (for 64754 H).
66358 H	Cab rear mounting bracket (for D-15,130" W.B. trucks).
66774 HB	Back cushion.
66779 HB	Seat cushion.
66812 HA	Sun visor with arm.
66869 HB	Door assembly, right.
66870 HB	Door assembly, left.
77078 H	Door check arm assembly.
	WINDSHIELD, REGULATOR AND WIPER ("V" Type)
51149 HC	Electric windshield wiper switch.
62102 H	Windshield weather seal.
63844 H	Windshield hinge.
63854 H	Windshield regulator support.
63857 HA	Windshield regulator, complete with worm and tape housing (less 63854 H support and 63858 HA handle).
63858 HA	Windshield regulator handle.
63875 HB	Windshield assembly (black frame)(for safety glass).
63877 HB	Windshield assembly (chrome frame)(for safety glass).
64644 H	Electric windshield wiper, right.
64645 H	Electric windshield wiper, left.
73087 H	Windshield glass (safety).
74556 H	Wiper blade.

John & Susan Hansen

For Personal Use ONLY

I H C Part No.	Description
	LICENSE PLATE BRACKETS
42372 HX	Rear bracket (used with 50004 H one-piece red lens tail lamp) *(see page 36)*.
46407 HX	Rear bracket (used with 46410 H two-piece lens - orange stop lamp) *(see page 36)*.
75943 HX	Front bracket.
	TOOLS, LIFTING JACK, ETC.
Q 3615	Grease fitting, 1/8" pipe thread, straight.
Q 3617	Grease fitting, 1/8" pipe thread, straight (1-1/4" body-overall)
Q 3626	Grease fitting, 1/8" pipe thread, 90° angle.
Q 3780	Grease compressor (Export only).
8373 H	Ball peen hammer.
27718 HB	Rear wheel bearing nut wrench handle (D-15).
43547 HX	Starting crank (D-2 and D-15).
44337 H	Rear wheel bearing nut wrench (D-15).
58596 H	Jack handle (D-15).
58792 HX	Jack with handle (D-15).
66323 H	Water pump wrench.
67022 HX	Jack with handle (D-2).
67028 H	Jack handle (D-2).
70782 H	Wheel nut wrench (D-2).
81178 H	Wheel nut wrench (D-15).
84148 H	Tool kit case (Export only).
84149 H	Double end wrench (Export only).
84150 H	Double end wrench.
84151 H	Combination pliers, 8".
84152 H	Screw driver, 7" (Export only).
84154 H	Double end wrench.
84155 H	Screw driver, 10".
22240 V	Hand tire pump (Export only).
53251 V	Auto wrench, 11".
3012 Y	Spark plug wrench.

John & Susan Hansen

For Personal Use ONLY

Avoid Accidents

Most accidents, whether they occur in industry, on the farm, at home, or on the highway, are caused by the failure of some individual to follow simple and fundamental safety rules or precautions. For this reason most accidents can be prevented by recognizing the real cause and doing something about it before the accident occurs.

Regardless of the care used in the design and construction of any type of equipment, there are many conditions that cannot be completely safeguarded against without interfering with reasonable accessibility and efficient operation.

A careful operator is the best insurance against an accident.

The complete observance of one simple rule would prevent many thousand serious injuries each year. That rule is: "Never attempt to clean, oil, or adjust a machine while it is in motion."

NATIONAL SAFETY COUNCIL

John & Susan Hansen

For Personal Use ONLY

GENERAL DATA

ENGINE:

Model (IHC) D-2 Trucks	HD-213
Model (IHC) D-15 Trucks	HD-213A
Number of Cylinders	6
Bore	3 5/16"
Stroke	4 1/8"
Piston Displacement (Cubic Inches)	213.24
Horsepower (A.M.A.)	26.3

ENGINE SERIAL NUMBER:

Stamped on upper crankcase on distributor side, front end.

CHASSIS SERIAL NUMBER AND WEIGHT:

Stamped on capacity plate on left-hand side of cowl, under hood.

TRANSMISSION SERIAL NUMBER:

Stamped on rear face of transmission case, below countershaft.

REAR AXLE SERIAL NUMBER:

Stamped on differential carrier.

WHEELBASE:

D-2 Trucks	113" and 125"
D-15 Trucks	113" and 130"

UNIT CAPACITIES:

Engine Oil (refill)	6 Quarts (U.S.)
Transmission	3 Pints (U.S.)
Differential (rear axle) for D-2	4 Pints (U.S.)
Differential (rear axle) for D-15	4½ Pints (U.S.)
Cooling System	15½ Quarts (U.S.)
Fuel Tank (rear)	13½ Gallons (U.S.)

TIRE PRESSURE:

D-2 TRUCKS

5.50 x 20 (6 Ply)	36 Pounds
6.00 x 16 (4 Ply)	32 "
6.00 x 16 (6 Ply)	40 "
6.00 x 20 (6 Ply)	36 "
6.50 x 16 (6 Ply)	40 "
7.00 x 15 (6 Ply)	36 "
7.50 x 15 (Jumbo)	24 "

D-15 TRUCKS

6.00 x 16 (6 Ply)	40 Pounds
6.50 x 16 (6 Ply)	40 "

D-15 TRUCKS

7.00 x 16 (6 Ply)	40 Pounds
7.00 x 16 (Truck Type)	40 "
7.50 x 16 (6 Ply)	40 "
7.50 x 16 (8 Ply)	40 "
6.00 x 20 (6 Ply)	45 "
6.50 x 20 (6 Ply)	50 "
7.00 x 20 (8 Ply)	55 "
7.50 x 20 (8 Ply)	55 "
8.25 x 20 (10 Ply)	60 "
34 x 7 (10 Ply)	85 "

Important

The owner will aid in rendering prompt and efficient service, by a careful observance of the following:

1—When ordering parts, give the Chassis Serial Number.

2—Write the part number wanted exactly as shown in parts list.

3—Give definite shipping instructions; when ordering by telegraph, prepay, and give correct address.

☞ *So that you may have it before you, write the Model and Chassis No. and the unit numbers here—*

*Chassis Serial No.*_____ *Engine No.*_____

*Rear Axle No.*_____ *Transmission No.*_____

Do not omit prefix or suffix letters appearing with numbers.

PRINTED IN UNITED STATES OF AMERICA

John & Susan Hansen

For Personal Use ONLY

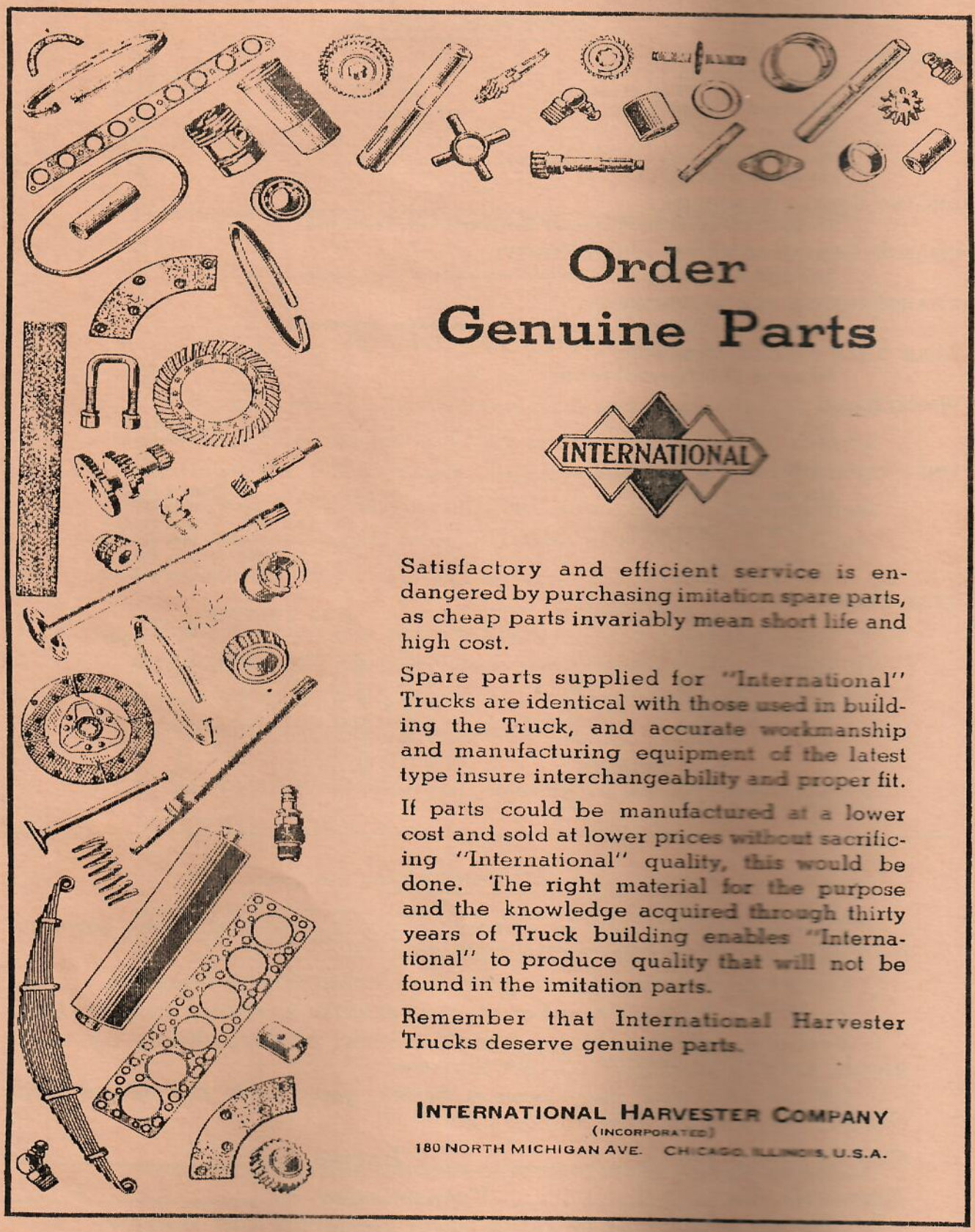

Order Genuine Parts

INTERNATIONAL

Satisfactory and efficient service is endangered by purchasing imitation spare parts, as cheap parts invariably mean short life and high cost.

Spare parts supplied for "International" Trucks are identical with those used in building the Truck, and accurate workmanship and manufacturing equipment of the latest type insure interchangeability and proper fit.

If parts could be manufactured at a lower cost and sold at lower prices without sacrificing "International" quality, this would be done. The right material for the purpose and the knowledge acquired through thirty years of Truck building enables "International" to produce quality that will not be found in the imitation parts.

Remember that International Harvester Trucks deserve genuine parts.

INTERNATIONAL HARVESTER COMPANY
(INCORPORATED)
180 NORTH MICHIGAN AVE. CHICAGO, ILLINOIS, U.S.A.

John & Susan Hansen